Instructions - Parts List

GRACO

REACTOR™ E-10

PLURAL COMPONENT PROPORTIONER

311075W

EN

For spraying or dispensing 1:1 mix ratio materials, including epoxies, polyurethane foam, polyurea coatings, and joint fill materials.
For professional use only.
Not approved for use in European explosive atmosphere locations.

Important Safety Instructions
Read all warnings and instructions in this manual. Save these instructions.

See page 4 for a list of models and maximum working pressures.

Heated Package, with Fusion™ Gun

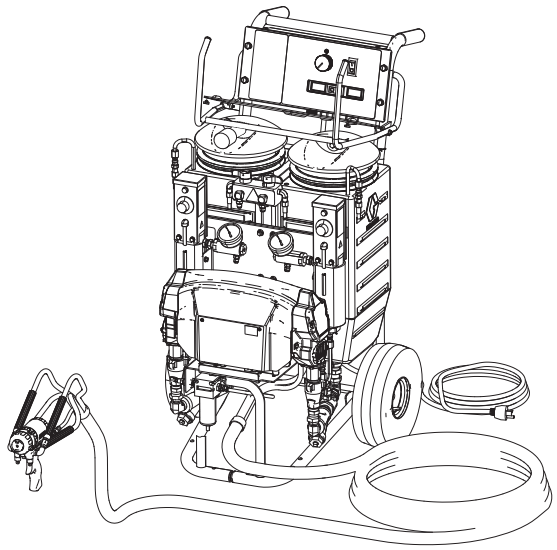

ti24095a

Nonheated Package, MD2 Cold Spray Gun

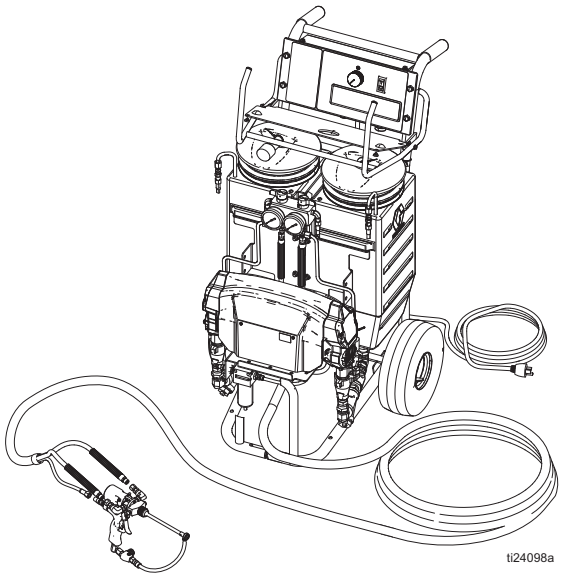

ti24098a

CE

PROVEN QUALITY. LEADING TECHNOLOGY.

Contents

Related Manuals 3
Systems 3
Models 4
Warnings 5
Overview 8
Important Isocyanate (ISO) Information 9
Material Self-ignition 10
Keep Components A and B Separate 10
Moisture Sensitivity of Isocyanates 10
Foam Resins with 245 fa Blowing Agents 11
Changing Materials 11
Component Identification 12
Controls and Indicators 14
Motor/Pump Control Function Knob 14
STATUS Indicator 14
Motor Power Switch/Circuit Breaker 15
Heater Power Switch/Circuit Breaker 15
Heater Temperature Controls 15
Fluid Temperature Sensors and Displays 15
Setup 16
Startup of Heated Units 23
Heatup Guidelines 24
Heat Management Tips 24
Heating Foam Resins with 245 fa Blowing Agents 25
Spraying/Dispensing 26
Pause (Heated Units) 27
Refilling Tanks 27
Pressure Relief Procedure 28
Shutdown 28
Maintenance 29
Flushing 30
Troubleshooting 32
Status Codes 32
Repair 40
Before Beginning Repair 40
Removing Supply Tanks 40
Recirc/Spray Valves 41
Displacement Pump 42
Control Module 44
Fluid Heaters (if supplied) 49
Pressure Transducers 49
Drive Housing 50
Motor Brushes 53
Fan 53
Parts 55
Suggested Spare Replacement Parts 71
Accessories 71
Dimensions 72
Technical Data 73
Notes 75
Graco Standard Warranty 76

Related Manuals

The following manuals are for Reactor E-10 components and accessories. Some are supplied with your package, depending on its configuration. Manuals are also available at www.graco.com.

Displacement Pump	
Part No.	**Description**
311076	Instruction-Parts Manual (English)
Fluid Heater	
Part No.	**Description**
311210	Instruction-Parts Manual (English)
Fusion Air Purge Spray Gun	
Part No.	**Description**
309550	Instruction-Parts Manual (English)

Fusion Mechanical Purge Spray Gun	
Part No.	**Description**
309856	Instruction-Parts Manual (English)
Fusion CS Spray Gun	
Part No.	**Description**
312666	Instruction-Parts Manual (English)
MD2 Dispense Valve	
Part No.	**Description**
312185	Instruction-Parts Manual (English)
3A2910	MD2 Cold Spray and Joint Fill Kits (English)
2K Manual Dispense Valve	
Part No.	**Description**
332198	Instruction-Parts Manual (English)

Systems

Part	Maximum Working Pressure, psi (MPa, bar)	Proportioner (see page 4)	Unheated Hose 35 ft (10.6 m)	Gun	
				Model	Part
AP9570	2000 (14, 140)	249570	249499	Fusion Air Purge	249810
AP9571	2000 (14, 140)	249571	249499	Fusion Air Purge	249810
AP9572	2000 (14, 140)	249572	249499	Fusion Air Purge	249810
CS9570	2000 (14, 140)	249570	249499	Fusion CS	CS22WD
CS9571	2000 (14, 140)	249571	249499	Fusion CS	CS22WD
CS9572	2000 (14, 140)	249572	249499	Fusion CS	CS22WD
249806	2000 (14, 140)	249576	249633	MD2 Gun	255325
249808	2000 (14, 140)	249577	249633	MD2 Gun	255325
24R984	2000 (14, 140)	249576	24R823	2K Manual	24R021
24R985	2000 (14, 140)	249577	24R823	2K Manual	24R021

Models

The model no., series letter, and serial no. are located on the back of the Reactor E-10. For faster assistance, please have that information ready before calling Customer Service.

Bare Proportioner Part, Series	Volts	* Electrical Connection	Application	Maximum Working Pressure, psi (MPa, bar)	Approvals
249570, A	120 V	15 A cord (motor) 15 A cord (heaters)	• Polyurethane Foam • Hot Polyureas	2000 (14, 140)	C ETL LISTED US Intertek 9902471 Conforms to ANSI/UL Std. 499 Certified to CAN/CSA Std. C22.2 No. 88
249571, A	240 V	10 A cord (motor) 10 A cord (heaters)	• Polyurethane Foam • Hot Polyureas	2000 (14, 140)	
249572, A	240 V	20 A cord (motor and heaters)	• Polyurethane Foam • Hot Polyureas	2000 (14, 140)	
249576, A	120 V	15 A cord (motor only)	• Self-leveling Joint Fillers • Cold Polyureas	2000 (14, 140)	C ETL LISTED US Intertek 9902471 Conforms to ANSI/UL Std. 73 Certified to CAN/CSA Std. C22.2 No. 68
249577, A	240 V	10 A cord (motor only)	• Self-leveling Joint Fillers • Cold Polyureas	2000 (14, 140)	

** See page 17 for detailed electrical requirements.*

Warnings

The following general warnings are for the setup, use, grounding, maintenance, and repair of this equipment. Additional, more specific warnings may be found throughout the body of this manual where applicable. *Symbols appearing in the body of the manual refer to these general warnings. When these symbols appear throughout the manual, refer back to these pages for a description of the specific hazard.*

⚠ WARNING	
	ELECTRIC SHOCK HAZARD Improper grounding, setup, or usage of the system can cause electric shock. • Turn off and disconnect power cord before servicing equipment. • Use only grounded electrical outlets. • Use only 3-wire extension cords. • Ensure ground prongs are intact on sprayer and extension cords. • Do not expose to rain. Store indoors.
 	TOXIC FLUID OR FUMES HAZARD Toxic fluids or fumes can cause serious injury or death if splashed in the eyes or on skin, inhaled or swallowed. • Read Safety Data Sheet (SDS) for handling instructions and to know the specific hazards of the fluids you are using, including the effects of long-term exposure. • When spraying, servicing equipment, or when in the work area, always keep work area well ventilated and always wear appropriate personal protective equipment. See **Personal Protective Equipment** warnings in this manual. • Store hazardous fluid in approved containers, and dispose of it according to applicable guidelines.
	PERSONAL PROTECTIVE EQUIPMENT Always wear appropriate personal protective equipment and cover all skin when spraying, servicing equipment, or when in the work area. Protective equipment helps prevent serious injury, including long-term exposure; inhalation of toxic fumes, mists or vapors; allergic reaction; burns; eye injury and hearing loss. This protective equipment includes but is not limited to: • A properly fitting respirator, which may include a supplied-air respirator, chemically impermeable gloves, protective clothing and foot coverings as recommended by the fluid manufacturer and local regulatory authority. • Protective eyewear and hearing protection.

⚠ WARNING

SKIN INJECTION HAZARD

High-pressure fluid from gun, hose leaks, or ruptured components will pierce skin. This may look like just a cut, but it is a serious injury that can result in amputation. **Get immediate surgical treatment.**

- Engage trigger lock when not spraying.
- Do not point gun at anyone or at any part of the body.
- Do not put your hand over the spray tip.
- Do not stop or deflect leaks with your hand, body, glove, or rag.
- Follow the **Pressure Relief Procedure** when you stop spraying and before cleaning, checking, or servicing equipment.
- Tighten all fluid connections before operating the equipment.
- Check hoses and couplings daily. Replace worn or damaged parts immediately.

FIRE AND EXPLOSION HAZARD

Flammable fumes, such as solvent and paint fumes, in **work area** can ignite or explode. To help prevent fire and explosion:

- Use equipment only in well ventilated area.
- Eliminate all ignition sources; such as pilot lights, cigarettes, portable electric lamps, and plastic drop cloths (potential static arc).
- Keep work area free of debris, including solvent, rags and gasoline.
- Do not plug or unplug power cords, or turn power or light switches on or off when flammable fumes are present.
- Ground all equipment in work area. See **Grounding** instructions.
- Use only grounded hoses.
- Hold gun firmly to side of grounded pail when triggering into pail.
- If there is static sparking or you feel a shock, **stop operation immediately.** Do not use equipment until you identify and correct the problem.
- Keep a fire extinguisher in the work area.

THERMAL EXPANSION HAZARD

Fluids subjected to heat in confined spaces, including hoses, can create a rapid rise in pressure due to the thermal expansion. Over-pressurization can result in equipment rupture and serious injury.

- Open a valve to relieve the fluid expansion during heating.
- Replace hoses proactively at regular intervals based on your operating conditions.

PRESSURIZED ALUMINUM PARTS HAZARD

Do not use 1,1,1-trichloroethane, methylene chloride, other halogenated hydrocarbon solvents or fluids containing such solvents in pressurized aluminum equipment. Such use can cause serious chemical reaction and equipment rupture, and result in death, serious injury, and property damage.

⚠ WARNING

EQUIPMENT MISUSE HAZARD

Misuse can cause death or serious injury.

- This equipment is for professional use only.
- Do not leave the work area while equipment is energized or under pressure. Turn off all equipment and follow the **Pressure Relief Procedure** in this manual when equipment is not in use.
- Do not exceed the maximum working pressure or temperature rating of the lowest rated system component. See **Technical Data** in all equipment manuals.
- Use fluids and solvents that are compatible with equipment wetted parts. See **Technical Data** in all equipment manuals. Read fluid and solvent manufacturer's warnings. For complete information about your material, request MSDS from distributor or retailer.
- Check equipment daily. Repair or replace worn or damaged parts immediately with genuine Graco replacement parts only.
- Do not alter or modify equipment.
- Use equipment only for its intended purpose. Call your Graco distributor for information.
- Route hoses and cables away from traffic areas, sharp edges, moving parts, and hot surfaces.
- Do not kink or over bend hoses or use hoses to pull equipment.
- Keep children and animals away from work area.
- Do not operate the unit when fatigued or under the influence of drugs or alcohol.
- Comply with all applicable safety regulations.

MOVING PARTS HAZARD

Moving parts can pinch or amputate fingers and other body parts.

- Keep clear of moving parts.
- Do not operate equipment with protective guards or covers removed.
- Pressurized equipment can start without warning. Before checking, moving, or servicing equipment, follow the **Pressure Relief Procedure** in this manual. Disconnect power or air supply.

BURN HAZARD

Equipment surfaces and fluid that's heated can become very hot during operation. To avoid severe burns, do not touch hot fluid or equipment. Wait until equipment/fluid has cooled completely.

Overview

The Reactor E-10 is a portable, electric-powered, 1:1 mix ratio proportioner, for use with a wide variety of coatings, foams, sealants, and adhesives. Materials must be self-leveling and pourable, and may be applied with impingement mix spray guns, disposable mixer guns, or flush-type mix manifolds.

Reactor E-10 is gravity-fed from 7 gal. (26.5 liter) supply tanks mounted on the unit. The tanks are translucent to allow monitoring of fluid level.

Severe duty, positive displacement reciprocating piston pumps meter fluid flow to the gun for mixing and applying. When set to recirculation mode, Reactor E-10 will circulate fluids back to the supply tanks.

Heated models include separate thermostatically controlled heaters for each fluid, and an insulated hose bundle with circulation return hoses. This allows the hoses and gun to be preheated to the desired temperature before spraying. Digital displays show the temperatures of the two fluids.

An electronic processor controls the motor, monitors fluid pressures, and alerts the operator if errors occur. See **STATUS Indicator**, page 14, for further information.

Reactor E-10 has two recirculation speeds, slow and fast, and an adjustable pressure output.

Slow Recirculation

- Slow circulation results in a higher temperature transfer in the heater, so hoses and gun heat up quicker.
- Good for touchup or low flow spraying, up to moderate temperature.
- Not used to circulate full tanks up to temperature.
- Use with 245 fa blowing agent foams, to minimize heat returned to tank and reduce frothing.

Fast Recirculation

- Use to support higher flow rates or higher temperatures by preheating the tanks.
- Agitates fluid within tanks, to avoid heating only the fluid at the top of the tank.
- Use for flushing.

Pressure Adjust

Automatically maintains selected pressure output for dispensing or spraying.

Important Isocyanate (ISO) Information

Isocyanates (ISO) are catalysts used in two component materials.

Isocyanate Conditions

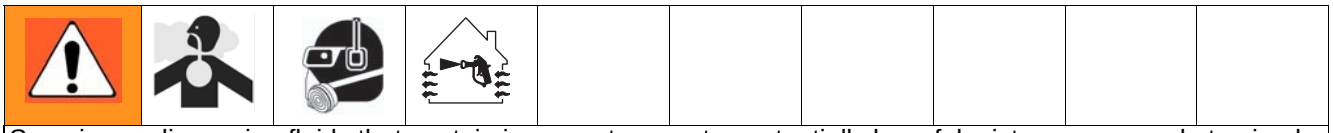

Spraying or dispensing fluids that contain isocyanates creates potentially harmful mists, vapors, and atomized particulates.

- Read and understand the fluid manufacturer's warnings and Safety Data Sheet (SDS) to know specific hazards and precautions related to isocyanates.
- Use of isocyanates involves potentially hazardous procedures. Do not spray with this equipment unless you are trained, qualified, and have read and understood the information in this manual and in the fluid manufacturer's application instructions and SDS.
- Use of incorrectly maintained or mis-adjusted equipment may result in improperly cured material.which could cause off gassing and offensive odors. Equipment must be carefully maintained and adjusted according to instructions in the manual.
- To prevent inhalation of isocyanate mists, vapors and atomized particulates, everyone in the work area must wear appropriate respiratory protection. Always wear a properly fitting respirator, which may include a supplied-air respirator. Ventilate the work area according to instructions in the fluid manufacturer's SDS.
- Avoid all skin contact with isocyanates. Everyone in the work area must wear chemically impermeable gloves, protective clothing and foot coverings as recommended by the fluid manufacturer and local regulatory authority. Follow all fluid manufacturer recommendations, including those regarding handling of contaminated clothing. After spraying, wash hands and face before eating or drinking.
- Hazard from exposure to isocyanates continues after spraying. Anyone without appropriate personal protective equipment must stay out of the work area during application and after application for the time period specified by the fluid manufacturer. Generally this time period is at least 24 hours.
- Warn others who may enter work area of hazard from exposure to isocyanates. Follow the recommendations of the fluid manufacturer and local regulatory authority. Posting a placard such as the following outside the work area is recommended:

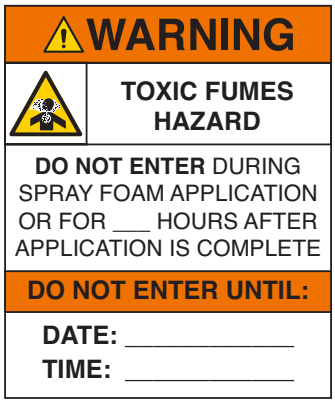

For all applications except spray foam

Spraying or dispensing fluids that contain isocyanates creates potentially harmful mists, vapors, and atomized particulates.

- Read and understand the fluid manufacturer's warnings and Safety Data Sheet (SDS) to know specific hazards and precautions related to isocyanates.
- Use of isocyanates involves potentially hazardous procedures. Do not spray with this equipment unless you are trained, qualified, and have read and understood the information in this manual and in the fluid manufacturer's application instructions and SDS.
- Use of incorrectly maintained or mis-adjusted equipment may result in improperly cured material. Equipment must be carefully maintained and adjusted according to instructions in the manual.
- To prevent inhalation of isocyanate mists, vapors, and atomized particulates, everyone in the work area must wear appropriate respiratory protection. Always wear a properly fitting respirator, which may include a supplied-air respirator. Ventilate the work area according to instructions in the fluid manufacturer's SDS.
- Avoid all skin contact with isocyanates. Everyone in the work area must wear chemically impermeable gloves, protective clothing and foot coverings as recommended by the fluid manufacturer and local regulatory authority. Follow all fluid manufacturer recommendations, including those regarding handling of contaminated clothing. After spraying, wash hands and face before eating or drinking.

Material Self-ignition

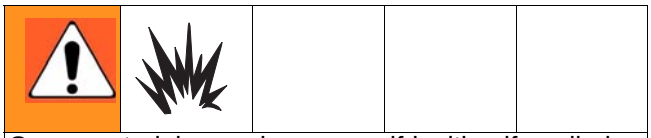

Some materials may become self-igniting if applied too thick. Read material manufacturer's warnings and Safety Data Sheet (SDS).

Keep Components A and B Separate

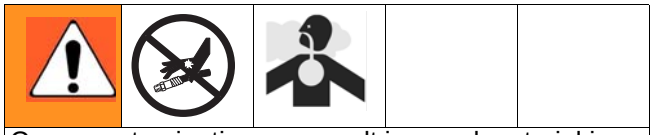

Cross-contamination can result in cured material in fluid lines which could cause serious injury or damage equipment. To prevent cross-contamination:

- **Never** interchange component A and component B wetted parts.
- Never use solvent on one side if it has been contaminated from the other side.

Moisture Sensitivity of Isocyanates

Exposure to moisture (such as humidity) will cause ISO to partially cure, forming small, hard, abrasive crystal that become suspended in the fluid. Eventually a film will form on the surface and the ISO will begin to gel, increasing in viscosity.

NOTICE

Partially cured ISO will reduce performance and the life of all wetted parts.

- Always use a sealed container with a desiccant dryer in the vent, or a nitrogen atmosphere. **Never** store ISO in an open container.
- Keep the ISO pump wet cup or reservoir (if installed) filled with appropriate lubricant. The lubricant creates a barrier between the ISO and the atmosphere.
- Use only moisture-proof hoses compatible with ISO.
- Never use reclaimed solvents, which may contain moisture. Always keep solvent containers closed when not in use.
- Always lubricate threaded parts with an appropriate lubricant when reassembling.

NOTE: The amount of film formation and rate of crystallization varies depending on the blend of ISO, the humidity, and the temperature.

Foam Resins with 245 fa Blowing Agents

Some foam blowing agents will froth at temperatures above 90°F (33°C) when not under pressure, especially if agitated. To reduce frothing, minimize preheating in a circulation system.

Changing Materials

NOTICE

Changing the material types used in your equipment requires special attention to avoid equipment damage and downtime.

- When changing materials, flush the equipment multiple times to ensure it is thoroughly clean.
- Always clean the fluid inlet strainers after flushing.
- Check with your material manufacturer for chemical compatibility.
- When changing between epoxies and urethanes or polyureas, disassemble and clean all fluid components and change hoses. Epoxies often have amines on the B (hardener) side. Polyureas often have amines on the B (resin) side.

Component Identification

Key for FIG. 1

A Supply Tank A
B Supply Tank B
C Pump A
D Pump B
E Heater A
F Heater B
G Fluid Pressure Gauges
H Recirc/Spray and Overpressure Relief Valves
J Control Panel; see FIG. 3, page 14
K Electric Motor and Drive Housings
L Insulated Hose Bundle (includes circulation return hoses)
M Fusion Air Purge Spray Gun
N Desiccant Dryer (mounts on supply tank A)
P Recirculation Tubes
Q Air Line Inlet (quick-disconnect fitting)
R Outlet Hose Connections
S Return Hose Connections
T Fluid Temperature Sensors
U Hose Rack and Control Shield
V Fluid Inlet Ball Valves (1 on each side)
W Fluid Inlet Strainers (1 on each side)
X Power Cord
Y Air Filter/Moisture Separator

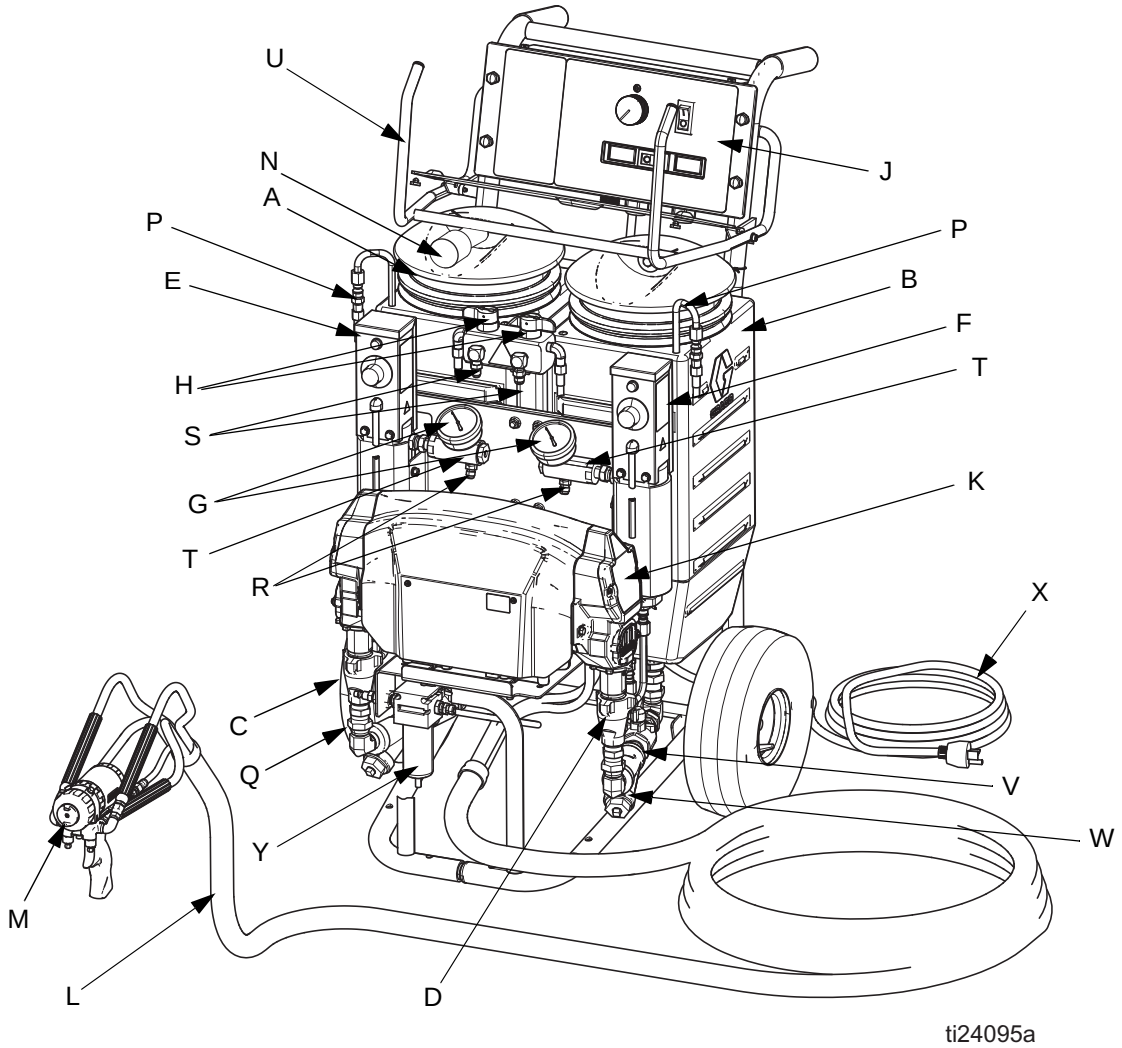

FIG. 1: Component Identification, Heated Packages (Part No. AP9572 Shown)

Key for FIG. 2

A Supply Tank A
B Supply Tank B
C Pump A
D Pump B
G Fluid Pressure Gauges
H Recirc/Spray and Overpressure Relief Valves
J Control Panel; see FIG. 3, page 14
K Electric Motor and Drive Housings
L Hose Bundle
M MD2 Cold Spray Gun (with disposable static mixer) or 2K Manual Gun
N Desiccant Dryer (mounts on supply tank A)
P Recirculation Tubes
Q Air Line Inlet (quick-disconnect fitting)
R Outlet Hose Connections
U Hose Rack and Control Shield
V Fluid Inlet Ball Valves (1 on each side)
W Fluid Inlet Strainers (1 on each side)
X Power Cord
Z Air Filter/Moisture Separator

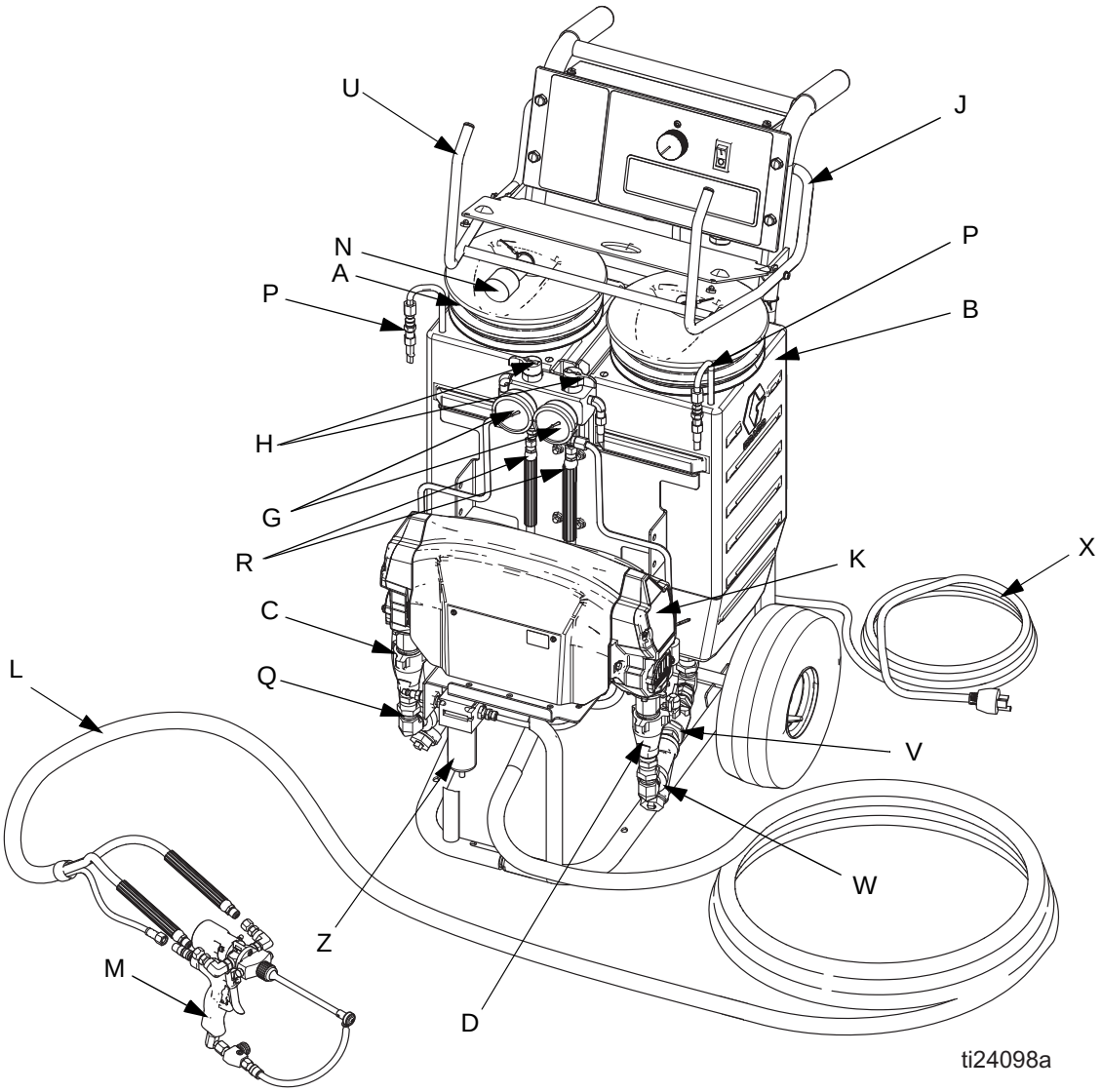

FIG. 2: Component Identification, Nonheated Packages (Part No. 249808 Shown)

Controls and Indicators

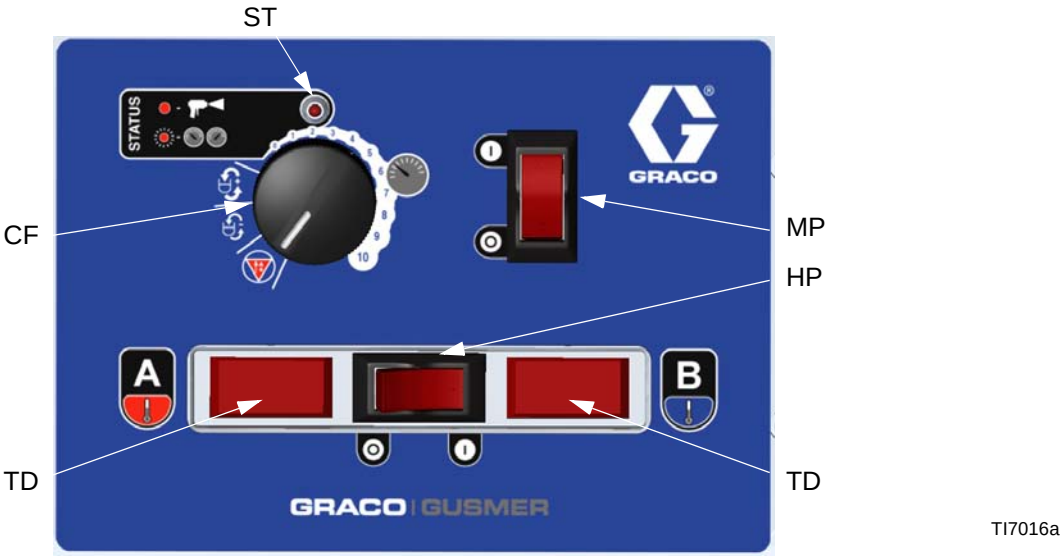

FIG. 3. Controls and Indicators (heated unit shown)

Motor/Pump Control Function Knob

Use knob (CF) to select desired function.

Icon	Setting	Function
	Stop/Park	Stops motor and automatically parks pumps.
	Slow Recirc	Slow recirculation speed.
	Fast Recirc	Fast recirculation speed.
	Pressure Adjust	Adjusts fluid pressure to gun in spray mode.

STATUS Indicator

- Indicator (ST) steady on: Motor Power switch is turned on and control board is working.
- Indicator (ST) blinking: If error occurs, STATUS indicator will blink 1 to 7 times to indicate status code, pause, then repeat. See TABLE 1 for a brief description of status codes. For more detailed information and corrective action, see page 32.

Table 1: Status Codes (see also the label on back of the control enclosure)

Code No.	Code Name
1	Pressure imbalance between A and B sides
2	Unable to maintain pressure setpoint
3	Pressure transducer A failure
4	Pressure transducer B failure
5	Excessive current draw
6	High motor temperature
7	No cycle counter switch input

The default is to shut down if a status code indication occurs. Codes 1 and 2 may be set to disable automatic shutdown if desired; see page 33. The other codes are not settable.

Motor Power Switch/Circuit Breaker

Switch (MP) turns power on to control board and function knob. The switch includes a 20 A circuit breaker.

Heater Power Switch/Circuit Breaker

See FIG. 3. Switch (HP) turns power on to heater thermostats. The switch includes a 20 A circuit breaker. Present on heated units only.

Heater Temperature Controls

See FIG. 4. Control knobs (HC) set temperature of component A and B heaters. Indicator lights (HL) turn on when thermostats are heating, and off when heater reaches setpoint. Present on heated units only.

Fluid Temperature Sensors and Displays

See FIG. 3. Fluid temperature sensors (T) monitor actual temperature of component A and B fluid going to spray gun. Temperatures are then displayed (TD). Present on heated units only.

Unit is shipped set to °F. To change to °C, see page 44.

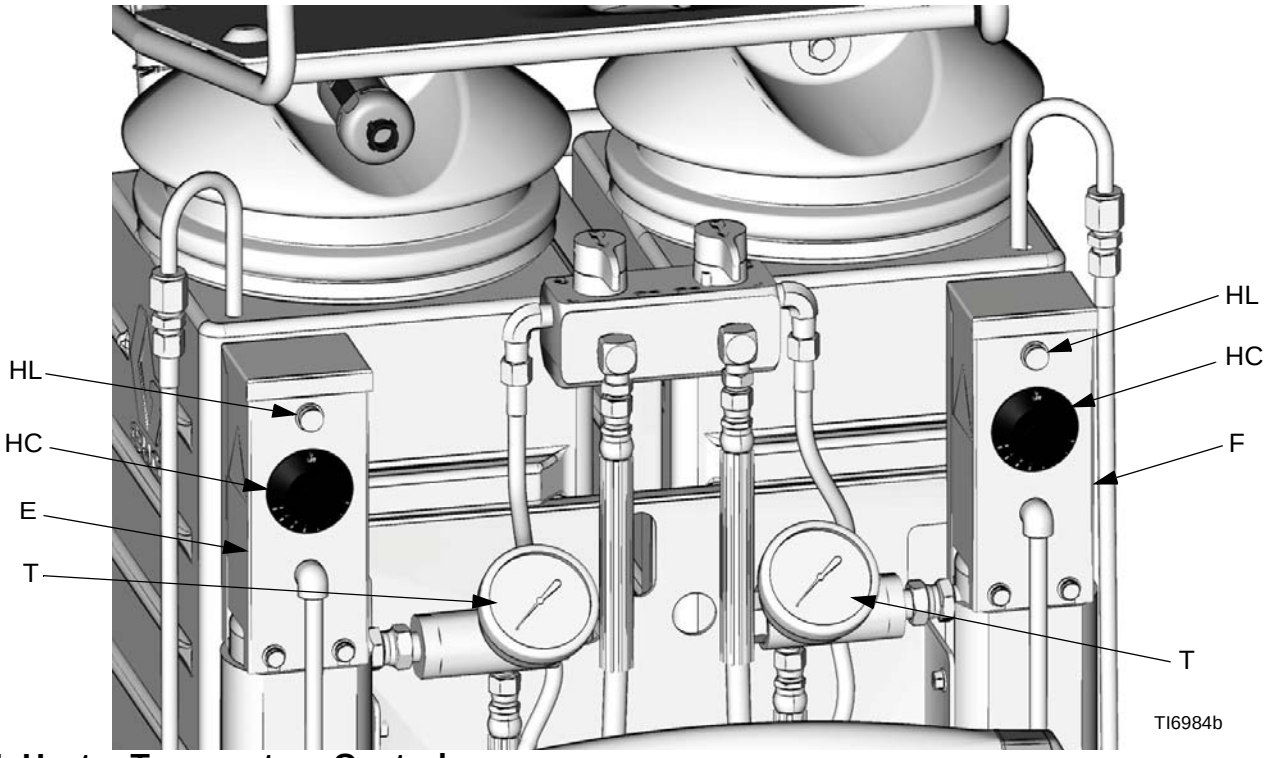

FIG. 4. Heater Temperature Controls

Setup

1. Locate Reactor E-10

a. Locate Reactor E-10 on a level surface.

b. Do not expose Reactor E-10 to rain.

2. Electrical requirements

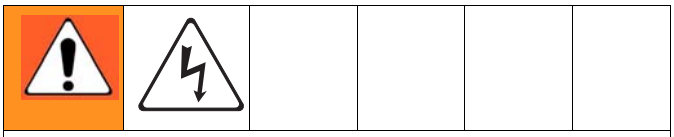

Improper wiring may cause electric shock or other serious injury if work is not performed properly. Have a qualified electrician perform any electrical work. Be sure your installation complies with all National, State and Local safety and fire codes.

Connect Reactor E-10 to the correct power source for your model. See TABLE 2. Models with two power cords must be connected to two separate, dedicated circuits. See FIG. 5.

Some models include cord adapters (55, 56) for use outside North America. Connect the appropriate adapter to the unit's power cord before connecting to your power source.

3. Ground system

The equipment must be grounded. Grounding reduces the risk of static and electric shock by providing an escape wire for the electrical current due to static build up or in the event of a short circuit.

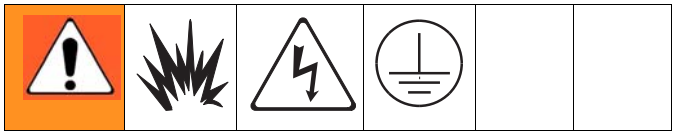

a. *Reactor E-10:* grounded through power cord.

b. *Generator (if used):* follow your local code. Start and stop generator with power cord(s) disconnected.

c. *Spray gun:* grounded through the supplied fluid hoses, connected to a properly grounded Reactor E-10. Do not operate without at least one grounded fluid hose.

d. *Object being sprayed:* follow your local code.

e. *Solvent pails used when flushing:* follow your local code. Use only metal pails, which are conductive, placed on a grounded surface. Do not place pail on a nonconductive surface, such as paper, plastic, or cardboard, which interrupts grounding continuity.

f. *To maintain grounding continuity when flushing or relieving pressure,* hold a metal part of spray gun firmly to the side of a grounded *metal* pail, then trigger gun.

Table 2: Electrical Requirements

Model	Required Power Source	Power Cord Connector
120 V, 1 phase, 50/60 Hz, two 15 ft (4.5 m) power cords, Heated	Two separate, dedicated circuits rated at minimum of 15 A each	Two NEMA 5-15T
240 V, 1 phase, 50/60 Hz, two 15 ft (4.5 m) power cords, Heated	Two separate, dedicated circuits rated at minimum of 10 A each	Two IEC 320, with two local adapters: Euro CEE74 Adapter Australia/China Adapter
240 V, 1 phase, 50/60 Hz, one 15 ft (4.5 m) power cord, Heated	Single dedicated circuit rated at minimum of 16 A	One NEMA 6-20P
120 V, 1 phase, 50/60 Hz, one 15 ft (4.5 m) power cord, Non-heated	Single dedicated circuit rated at minimum of 15 A	One NEMA 5-15T
240 V, 1 phase, 50/60 Hz, one 15 ft (4.5 m) power cord, Non-heated	Single dedicated circuit rated at minimum of 8 A	One NEMA 6-20P

Table 3: Extension Cord Requirements

Model	Required Wire Size	
	Up to 50 ft (15 m)	Up to 100 ft (30 m)
Nonheated and two cord heated models	AWG 14	AWG 12
Single cord heated model	AWG 12	AWG 10

Cords must be 3-conductor grounded, rated for your environment.

To avoid electric shock, always unplug both cords before servicing Reactor E-10.

1 Ensure no other high amp loads are connected while running Reactor E-10.

2 To verify separate circuits, plug in Reactor E-10 or a worklight and cycle breakers on and off.

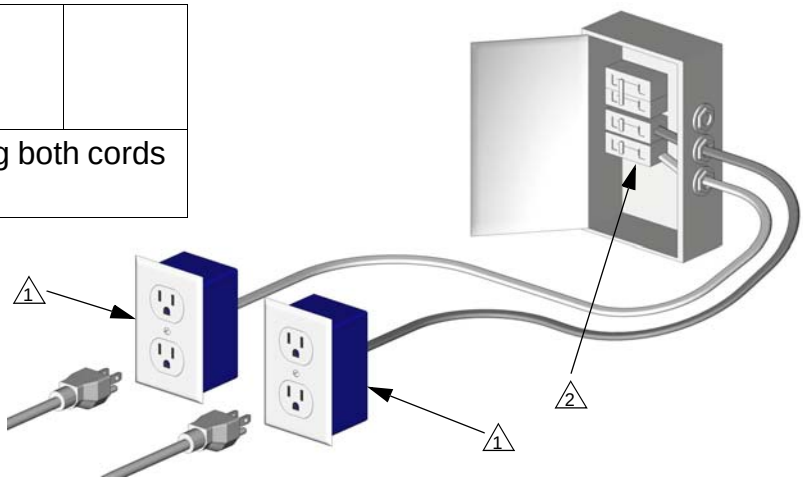

FIG. 5. Use Two Separate Circuits for Two Cord Models

4. Connect fluid hoses

Connect fluid supply hoses to outlet hose connections (R, FIG. 6). Red hoses for component A (ISO), blue for component B (RES). Fittings are sized to prevent connection errors. Connect other end of hoses to A and B inputs of gun.

Heated units only: connect recirculation hoses from gun recirculation ports to connections (S).

5. Connect gun air hose

For air operated guns only: Connect gun air hose to the gun air input and to the air filter outlet (Z). If you are using more than one hose bundle, join the air hoses with the nipple (305) provided with the hose bundle.

On heated units with Fusion guns, connect the supplied ball valve and quick-disconnect coupler to the gun air hose, then connect the coupler to the gun air fitting.

6. Connect main air supply

Connect the main air supply to the quick disconnect fitting (Q) on the unit. Air supply hose must be at least 5/16 in. (8 mm) ID up to 50 ft (15 m) or 3/8 in. (10 mm) ID up to 100 ft (30 m).

Air Filter/Moisture Separator (Z) is equipped with an automatic moisture drain.

7. Flush before first use

The Reactor E-10 is tested with a plasticizer oil at the factory. Flush out the oil with a compatible solvent before spraying. See page 30.

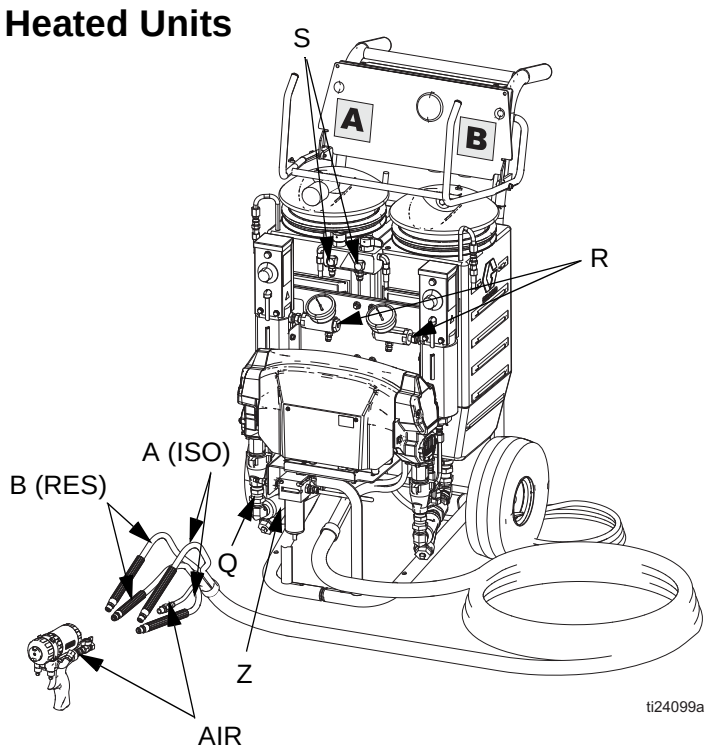

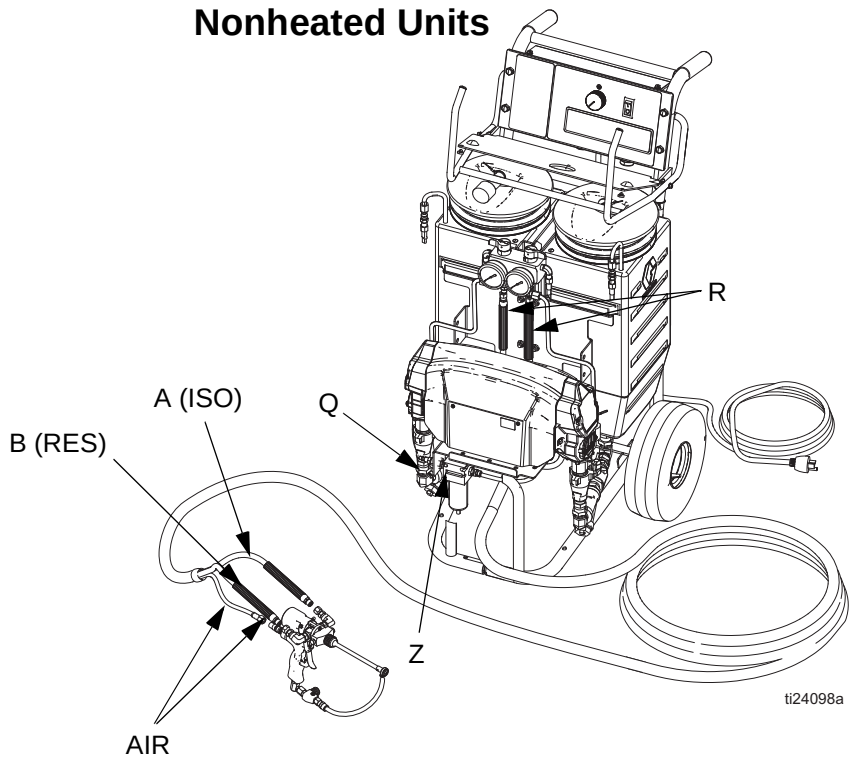

FIG. 6. Hose Connections

8. Fill wet-cups

Keep the felt washers in the pump wet-cups saturated with Graco ISO pump oil, Part No. 217374. The lubricant creates a barrier between the ISO and the atmosphere.

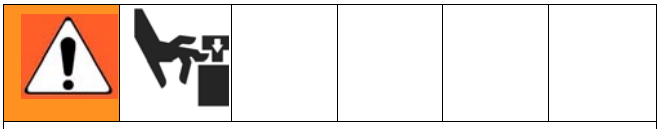

Pump rod and connecting rod move during operation. Moving parts can cause serious injury such as pinching or amputation. Keep hands and fingers away from wet-cup during operation. Shut off Motor Power before filling wet-cup.

Fill wet-cups through slots in plate, or loosen screws and swing plate aside.

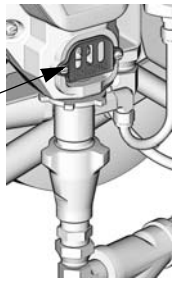

TI6985a

9. Fill fluid tanks

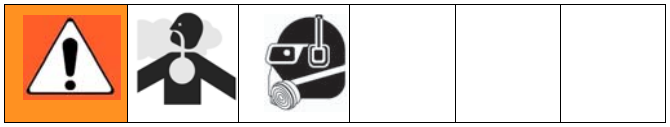

NOTICE

To prevent cross-contamination of fluids and equipment parts, **never** interchange component A (isocyanate) and component B (resin) parts or containers.

Have at least two 5 gal. (19 liter) pails to transfer fluid from drums to supply tanks. Label one pail “A” and the other “B”, using the red and blue labels provided. Always doublecheck which material you have before pouring it in the supply tanks. Pouring is easier if pails are not filled to the top.

Open only one supply tank at a time, to avoid splashing material from one tank into the other when filling.

Using a drill and mixing blade, mix filled or separated materials in the pail before adding to the tanks. Material left in the tanks overnight may need to be remixed in the tanks.

a. Lift hose rack. Remove tank A cover and pour ISO into tank A (red side, with desiccant filter in cover). Replace cover ⚠1.

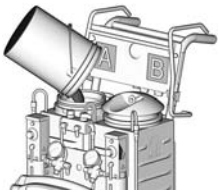

TI7017a

Desiccant filter is blue when fresh, and turns pink when saturated. Be sure shipping plugs are removed from openings on desiccant filter.

b. Remove tank B cover and pour resin into tank B (blue side). Replace cover ⚠1.

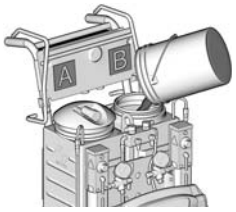

TI7018a

⚠1. Add thin coating of grease lubricant to tank o-ring if lid is difficult to assemble to tank.

10. Purge air and flush fluid from lines

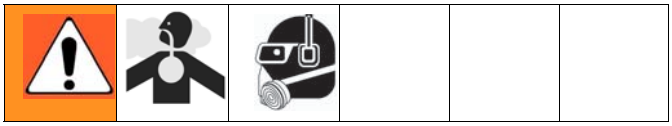

a. Remove both recirculation tubes (P) from the tanks and secure each one in a dedicated waste container.

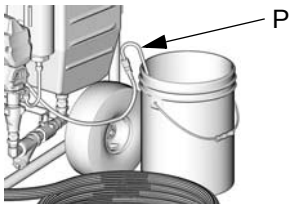

TI7022a

b. Set function knob to Stop/Park .

c. Plug in power cord(s). See TABLE 2, page 17.

d. Open both pump fluid inlet valves (V, shown in open position).

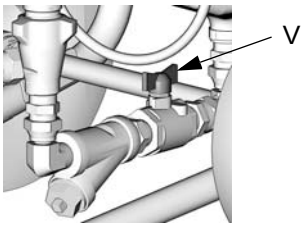

TI7019a

e. Turn on Motor Power.

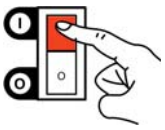

f. Set Recirc/Spray valves to Recirc.

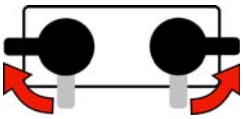

g. Set function knob to Slow Recirc or Fast Recirc .

OR

h. When clean fluids exit both recirculation tubes (P), set function knob to Stop/Park .

i. Replace recirculation tubes in supply tanks.

j. On nonheated units, purge the hoses through the gun without a static mixer installed.

For heated units, continue with **Startup of Heated Units**, page 23.

Nonheated units are ready to spray/dispense. Go to **Spraying/Dispensing**, page 26.

Startup of Heated Units

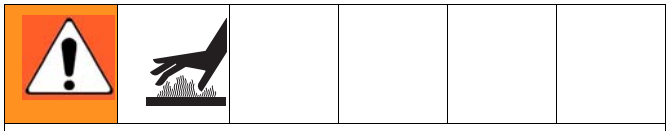

Some models heat the fluid, which can cause equipment surfaces to become very hot. To avoid severe burns:

- Do not operate Reactor E-10 without all covers and shrouds in place.
- Do not touch hot fluid or equipment.
- Allow equipment to cool completely before touching it.
- Wear gloves if fluid temperature exceeds 110°F (43°C).

1. Perform **Setup**, pages 16-22.

2. Set function knob to Slow Recirc or Fast Recirc . See **Heatup Guidelines**, page 24, then continue with steps 3-6.

OR

3. Turn on Heater Power.

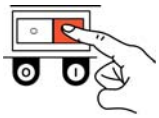

4. Temporarily set heater control knobs to maximum setting.

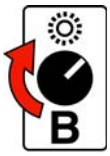

5. Circulate through heaters until temperature readouts display desired temperature. See TABLE 4 below.

6. Adjust heater control knobs as necessary for a stable spray temperature.

Table 4: Heatup Time Guidelines for starting a cold machine with 5 gal. (19 l) per side (see Notes below)

Fluid Spray Target Temperature	35 ft (10.7 m) Hose (1 bundle)	70 ft (21 m) Hose (2 bundles)
125°F (52°C)	20 minutes	25 minutes
150°F (65°C)	40 minutes	50 minutes

Use fast circulation until temperature is within 20°F (11°C) of target, then use slow circulation to reach final temperature.

Different fluids will absorb heat at different rates. When refilling a warm machine, heatup times will be less.

Heatup Guidelines

The fluids must be circulated from the pumps through the heaters, hoses, and back to the tanks to ensure warm fluids are supplied to the gun.

Slow Recirculation

- Slow Recirc results in a higher temperature transfer in the heater, so hoses and gun heat up quicker.
- Good for touchup or low flow spraying, up to moderate temperature.
- Not used to circulate full tanks up to temperature.
- Use with 245 fa blowing agent foams, to minimize heat returned to tank and reduce frothing.

Fast Recirculation

- Fast Recirc keeps heaters on fulltime to bring fluid tanks up to temperature. The higher your usage rate, the more heat needed in the tanks before spraying.
  - *For normal usage rates:* Use Fast Recirc to get tanks to approximately 50°F (28°C) below desired spray temperature, then use Slow Recirc to raise hose and gun to desired temperature.
  - *For higher flow rates or continuous spraying:* Use Fast Recirc to bring temperature of tanks to approximately 20°F (11°C) below desired spray temperature, then use Slow Recirc to raise hose and gun to desired temperature.
  - *Volume in tanks:* Use only what you need. For example, 2.5 gal. (10 l) in each tank will heat up almost twice as fast as 5 gal. (20 l).
- Mixes fluid within tanks, to avoid heating only the fluid at the top of the tank.
- Use for flushing.

Heat Management Tips

- Heaters perform better with lower flow rates or smaller mix modules.
- Triggering the gun for short periods helps maintain efficient heat transfer, keeping material at the desired temperature. Triggering the gun for a long period does not allow enough heating time, and cold material will enter the hose.
- If temperature displays fall below acceptable limits, set function knob to Slow Recirc and circulate again to bring temperatures back up.
- Each 35 ft (10.7 m) hose bundle adds about 5 minutes to heatup time, with most materials. Water-based materials take longer to heat up. Maximum recommended hose length is 105 ft (32 m).
- Use Fast Recirc until tanks are warm to the touch, then use Slow Recirc until displays read desired temperature.
- For a quicker start, do initial heatup circulation with the tanks 1/4 to 1/3 filled, then add more material.

Heating Foam Resins with 245 fa Blowing Agents

New foam blowing agents will froth at temperatures above 90°F (33°C) when not under pressure, especially if agitated.

Never fill the 7 gal. (26 l) supply tanks beyond the 5 gal. (19 l) line on the tanks, to leave room for some frothing.

At High Ambient Temperature (above 75°F/24°C)

- Pour resins slowly to avoid frothing.
- Only use Slow Recirc, to avoid heating and agitating the tank. If temperature doesn't keep up, set function knob to Stop/Park, then set to Slow Recirc again.
- When you stop to refill the tanks, avoid boiling off fluid in the heaters by following these steps:

  a. Shut off Heater Power.

  b. Leave hoses under pressure.

  c. Fill tanks, page 20.

  d. Set Recirc/Spray valves to Recirc.

  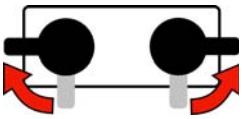

  e. Set function knob to Slow Recirc.

  f. Turn on Heater Power. 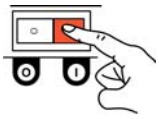

At Cool Ambient Temperature (below 75°F/24°C)

- Use Fast Recirc to heat tanks to 75-90°F. (24-32°C), then use Slow Recirc to raise hose and gun to desired spray temperature.
- If the top of the resin in tank starts frothing, do not use Fast Recirc any more.

Spraying/Dispensing

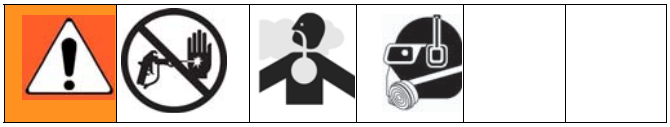

For air operated guns only: Air is supplied to spray gun with gun piston safety lock or trigger safety lock engaged and gun fluid manifold valves A and B closed (if present).
If using 2K Manual Dispense Valve, see dispense valve instruction manual.

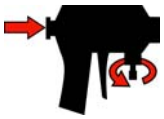

Fusion

ti10442a

MD2

1. Set function knob to Stop/Park .

2. Set Recirc/Spray valves to Spray.

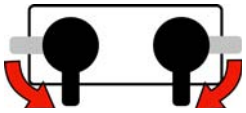

3. Turn function knob to Pressure Adjust . Keep turning to the right until fluid pressure gauges show desired pressure.

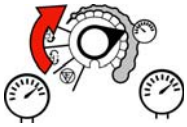

Use lower pressures for joint filling applications.

4. Check fluid pressure gauges to ensure proper pressure balance. If imbalanced, reduce pressure of higher component by **slightly** turning Recirc/Spray valve for that component toward Recirc, until gauges show balanced pressures. The pressure imbalance alarm (Status Code 1) is inactive for 10 sec after entering spray pressure mode, to allow time to balance pressures.

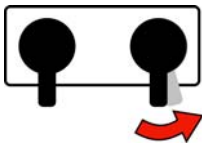

In this example, B side pressure is higher, so use the B side valve to balance pressures.

Watch gauges for 10 sec to be sure pressure holds on both sides and pumps are not moving.

5. Open gun fluid manifold valves A and B (impingement mix guns only).

On impingement guns, **never** open fluid manifold valves or trigger gun if pressures are imbalanced.

6. Disengage piston safety lock or trigger safety lock.

Fusion

ti10441a

MD2

7. Test spray onto cardboard or plastic sheet. Verify that material fully cures in the required length of time, and is the correct color. Adjust pressure and temperature to get desired results. Equipment is ready to spray.

Pause (Heated Units)

To bring the hose and gun back to spray temperature after a brief break, use the following procedure.

1. Engage piston safety lock or trigger safety lock.

Fusion

ti10442a

MD2

2. Set function knob to Slow Recirc.

3. Set Recirc/Spray valves to Recirc until temperature readouts come back up.

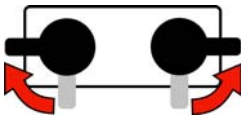

4. *If you stop spraying for more than 2 minutes when using an impingement mix gun,* close gun fluid valves A and B. Doing this will keep the internal parts of the gun cleaner and prevent crossover.

Refilling Tanks

Material can be added to the tanks at any time. See page 20.

If you are operating at high temperatures or flow rates, follow instructions under **Pause (Heated Units)** to bring tanks up to temperature.

NOTICE
To prevent cross-contamination of fluids and equipment parts, **never** interchange component A (isocyanate) and component B (resin) parts or containers. Have at least two 5 gal. (19 liter) pails to transfer fluid from drums to supply tanks. Label one pail “A” and the other “B”, using the red and blue labels provided. Always doublecheck which material you have before pouring it in the supply tanks. Pouring is easier if pails are not filled to the top. Open only one supply tank at a time, to avoid splashing material from one tank into the other when filling.

Pressure Relief Procedure

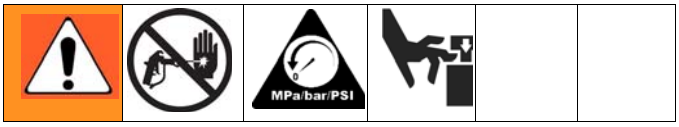

1. Engage piston safety lock or trigger safety lock.

Fusion

ti10442a

MD2

2. Set function knob to Stop/Park .

3. Turn Recirc/Spray valves to Recirc. Fluid will be dumped to supply tanks. Pumps will move to the bottom of their stroke. Ensure gauges drop to 0.

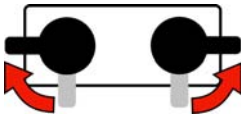

Shutdown

For longer breaks (more than 10 minutes), use the following procedure. If you will be shut down for more than 3 days, first see **Flushing**, page 30.

1. Follow all steps of **Pressure Relief Procedure**, at left.

2. *If using an impingement mix gun,* close gun fluid valves A and B. Doing this will keep the internal parts of the gun cleaner and prevent crossover.

3. Shut off Heater Power (heated units only).

4. Shut off Motor Power.

5. Refer to your separate gun manual and perform the **Shutdown** procedure.

Maintenance

- Check pump wet-cups fluid level daily, page 20.
- Do not overtighten packing nut/wet-cup. Throat u-cup is not adjustable.
- Keep component A from exposure to moisture in atmosphere, to prevent crystallization.
- Wipe supply tank lid o-ring and inner rim daily to prevent ISO crystallization. Keep film of grease on o-ring and inside of lid.
- Check desiccant filter weekly. Filter is blue when fresh, and turns pink when saturated.
- Remove plug (X) and clean fluid inlet strainer (51a) as needed. Always clean the fluid inlet strainers after flushing.

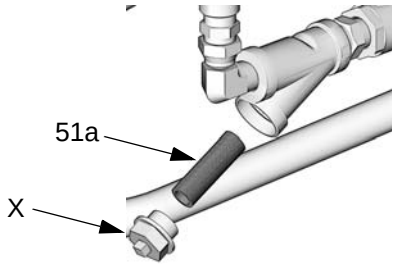

TI7021a

- Generally, flush if you will shutdown for more than three days. Flush more often if material is moisture sensitive and humidity is high in the storage area, or if material may separate or settle out over time.
- *If using an impingement mix gun,* close gun fluid valves A and B when not spraying. Doing this will keep the internal parts of the gun cleaner and prevent crossover. Clean gun mix chamber ports and check valve screens regularly. See gun manual.

- *If using an Fusion Air Purge impingement mix gun,* always grease the gun after use until purge air carries grease mist out the front of the gun. Use Part No. 117773 Grease. See gun manual 309550.

Flushing

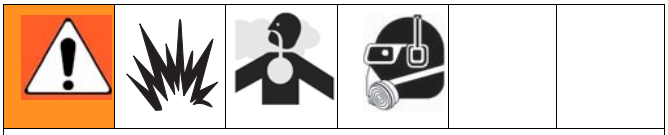

Flush equipment only in a well-ventilated area. Do not spray flammable fluids. Do not turn on heaters while flushing with flammable solvents.

- Generally, flush if you will be shut down for more than 3 days. Flush more often if material is moisture sensitive and humidity is high in the storage area, or if material may separate or settle out over time.
- Flush out old fluid with new fluid, or flush out old fluid with a compatible solvent before introducing new fluid.
- Use the lowest possible pressure when flushing.
- Always leave some type of fluid in system. Do not use water.
- For long term storage, flush out the solvent with a storage fluid such as Bayer Mesamoll plasticizer or, at minimum, clean motor oil.

1. Engage piston safety lock or trigger safety lock. Close fluid valves A and B. Leave air on.

Fusion

ti10442a

MD2

2. Set function knob to Stop/Park .

3. Shut off Heater Power (heated units only). Allow system to cool.

4. Remove recirculation tubes (31) from supply tanks and place in original containers or waste containers.

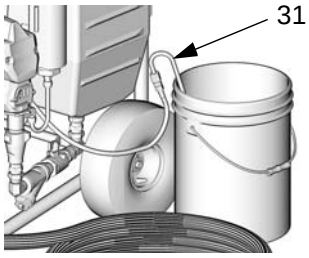

TI7022a

5. Turn Recirc/Spray valves to Recirc.

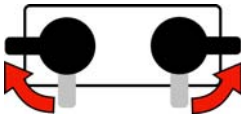

6. Set function knob to Fast Recirc . Pump material from supply tanks until no more comes out.

7. Set function knob to Stop/Park .

8. Wipe out any remaining material from the supply tanks. Fill each supply tank with 1-2 gal. (3.8-7.6 l) of solvent recommended by your material manufacturer.

9. Set function knob to Fast Recirc . Pump solvent through system to waste containers.

10. When nearly clear solvent comes from recirculation tubes, set function knob to Stop/Park . Return recirculation tubes to supply tanks.

11. Set function knob to Fast Recirc . Circulate solvent through system for 10-20 minutes to ensure thorough cleaning.

To flush gun, refer to gun instruction manual.

Purge Gun Hoses (Nonheated Units Only)

Disconnect hoses from gun and secure back into the tanks for thorough cleaning with solvent.

- Turn Recirc/Spray valve A to Spray.

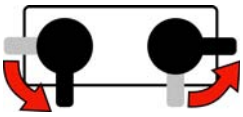

- Open gun into waste container A.
- Set function knob to Slow Recirc until hose is flushed.
- Set function knob to Stop/Park .
- Repeat for B side.

12. Set function knob to Stop/Park .

13. Solvent flushing is a two step process. Go back to step 4, drain solvent, and flush again with fresh solvent.

14. Leave unit filled with solvent, plasticizer, clean motor oil, or refill supply tanks with new material and reprime.

Never leave the unit dry unless it has been disassembled and cleaned. If fluid residue dries in the pumps, the ball checks may stick the next time you use the unit.

Troubleshooting

Status Codes

Determine the status code by counting the number of times the status indicator (ST) blinks.

TI7016a

Status Code 1: Pressure Imbalance

The unit does not check for pressure imbalance at setpoints less than 250 psi (1.75 MPa, 17.5 bar).

The unit does not check for pressure imbalance for 10 sec after entering pressure mode.

Unit senses pressure imbalance between components A and B, and warns or shuts down, depending on settings of DIP switches 1 and 2. To turn off automatic shutdown and/or tighten pressure tolerances for status code 1, see **Status Code 1 and 2 Settings**.

1. Check fluid supply of lower pressure component and refill if necessary.
2. Reduce pressure of higher component by **slightly** turning Recirc/Spray valve for that component toward Recirc, until gauges show balanced pressures.

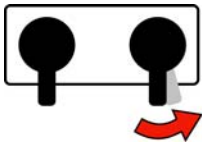

In this example, B side pressure is higher, so use the B side valve to balance pressures.

Turn Recirc/Spray valve only enough to balance pressure. If turned completely, all pressure will bleed off.

3. Check fluid inlet strainers (51a, page 29) and fluid filters at gun.
4. Clean or change restrictor at mixer manifold if using disposable mixer gun kit.

Status Code 2: Pressure Deviation from Setpoint

The unit does not check for pressure deviation at setpoint less than 400 psi (2.8 MPa, 28 bar).

Unit senses pressure deviation from setpoint, and warns or shuts down, depending on settings of DIP switches 3 and 4. If equipment cannot maintain enough pressure for a good mix with an impingement mix gun, try using a smaller mix chamber or nozzle.

To turn off automatic shutdown and/or tighten pressure tolerances for status code 2, see **Status Code 1 and 2 Settings**.

Status Code 1 and 2 Settings

1. Locate switch SW2 on the control board, page 48.
2. Set the four DIP switches to the desired positions. See FIG. 7 and TABLE 5 on page 33.

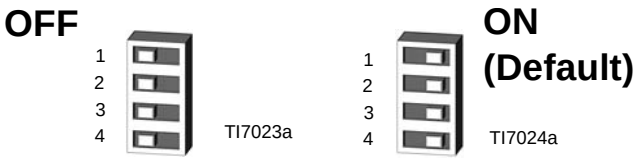

FIG. 7. DIP Switch (SW2) Settings

Table 5: Status Code 1 and 2 Settings

DIP Switch and Function	Left	Right (default setting)
DIP Switch 1 If selected, causes shutdown or displays a warning if the pressure imbalance exceeds selection made in DIP Switch 2	WARNING	SHUTDOWN
DIP Switch 2 If selected, causes *shutdown* if A and B pressure imbalance is greater than	500 psi (3.5 MPa, 35 bar) (60% if < 800 psi [5.6 MPa, 56 bar] running)	800 psi (5.6 MPa, 56 bar) (70% if < 800 psi [5.6 MPa, 56 bar] running)
If selected, causes *warning* if A and B pressure imbalance is greater than	300 psi (2.1 MPa, 21 bar) (50% if < 800 psi [5.6 MPa, 56 bar] running)	500 psi (3.5 MPa, 35 bar) (60% if < 800 psi [5.6 MPa, 56 bar] running)
DIP Switch 3 If selected, causes shutdown or displays a warning due to deviation of pressure from setpoint exceeds selection made in DIP Switch 4	WARNING	SHUTDOWN
DIP Switch 4 Causes warning if deviation of pressure from setpoint is greater than	300 psi (2.1 MPa, 21 bar) (25% if < 800 psi [5.6 MPa, 56 bar])	500 psi (3.5 MPa, 35 bar) (40% if < 800 psi [5.6 MPa, 56 bar])

Status Code 3: Transducer A Failure

1. Check transducer A electrical connection (J3) at board, page 48.
2. Reverse A and B transducer electrical connections at board, page 48. If error moves to transducer B (Status Code 4), replace transducer A, page 49.

Status Code 4: Transducer B Failure

1. Check transducer B electrical connection (J8) at board, page 48.
2. Reverse A and B transducer electrical connections at board, page 48. If error moves to transducer A (Status Code 3), replace transducer B, page 49.

Status Code 5: Excessive Current Draw

Shut off unit and contact distributor before resuming operation.

1. Locked rotor; motor unable to turn. Replace motor, page 52.
2. Short on control board. Replace board, page 47.
3. Worn or hung up motor brush causing arcing of brush at commutator. Replace brushes, page 53.

Status Code 6: High Motor Temperature

Motor is running too hot.

1. Motor temperature too high. Reduce pressure duty cycle, gun tip size, or move Reactor E-10 to a cooler location. Allow 1 hour for cooling.
2. Check fan operation. Clean fan and motor housing.

Status Code 7: No Cycle Counter Switch Input

Have not received input from cycle counter switch for 10 seconds after selecting Recirc mode.

1. Check cycle counter switch connection to board (J10, pins 5, 6), page 48.
2. Check that magnet (224) and cycle counter switch (223) are in place under B side motor end cover (227). Replace if necessary.

Troubleshooting Chart

PROBLEM	CAUSE	SOLUTION
Reactor E-10 does not operate.	No power.	Plug in power cord.
		Cycle Motor Power off , then on 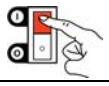 to reset breaker.
Motor does not operate.	Power turned on with function knob set to a run position.	Set function knob to Stop/Park , then select desired function.
	Loose connection on control board.	Check connection at J11 (120 V) or J4 (240 V). See page 47.
	Worn brushes.	Check both sides. Replace brushes worn to less than 1/2 in. (13 mm), see page 53.
	Broken or misaligned brush springs.	Realign or replace, page 53.
	Brushes or springs binding in brush holder.	Clean brush holder and align brush leads for free movement.
	Shorted armature.	Replace motor, page 52.
	Check motor commutator for burn spots, black pitting, or other damage.	Remove motor. Have motor shop resurface commutator, or replace motor, page 52.
	Failed control board.	Replace board. See page 47.
Fan not working.	Loose fan cable.	Check that cable is connected at fan and at J9 on control board. See pages 53 and 47.
	Defective fan.	Test and replace if necessary, page 53.
Pump output low.	Plugged fluid inlet strainer.	Clear, see page 29.
	Plugged disposable mixer.	Clean or replace.
	Leaking or plugged piston valve or intake valve in displacement pump.	Check valves. See pump manual.
One side doesn’t come up to pressure in spray mode.	Dirty or damaged Recirc/Spray valve.	Clean or repair, page 41.
	Plugged fluid inlet strainer.	Clear, see page 29.
	Pump intake valve plugged or stuck open.	Clean pump intake valve. See page 42.
	Material is too viscous to pump with unheated unit.	Warm material before adding to tanks.

PROBLEM	CAUSE	SOLUTION
Pressure is higher on one side when setting pressure with function knob.	Pump intake valve partially plugged.	Clean pump intake valve. See page 42.
	Air in hose. Fluid is compressible.	Purge air from hose.
	Unequal size hoses or unequal hose construction.	Use matching hoses, or balance pressures before spraying.
Pressures are not balanced when running, but pressure is generated and holds on both strokes.	Unequal viscosities.	Change temperature setting to balance viscosities.
		Change restrictor at mix point to balance back pressure.
	Restriction on one side.	Clean mix module or restrictor at mix manifold.
		Clean gun check valve screens.
Fluid leak in pump packing nut area.	Worn throat seals.	Replace. See pump manual.
Pressure doesn't hold when stalled against gun in spray mode.	Leaking Recirc/Spray valve.	Repair, page 41.
	Leaking piston valve or intake valve in displacement pump.	Repair. See pump manual.
	Leaking gun shutoff.	Repair. See gun manual.
Pressure is higher on B side during startup of recirculation, especially in High Recirc mode.	This is normal. Component B is typically higher viscosity than component A until the material is heated during recirculation.	No action required.
Resin froths and overflows tank after refilling hot equipment.	Agitation from pouring. Hot material in heaters and hoses froths when not under pressure.	Turn heaters off before refilling. Leave hoses pressurized. See page 25.
One gauge shows half as many pulses as the other when pumps are cycling.	Loss of pressure on downstoke.	Intake valve is leaking or not closing. Clean or replace valve; see page 42.
	Loss of pressure on upstoke.	Piston valve is leaking or not closing. Clean or replace valve or packings; see page 42.
Status indicator (red LED) not lit.	Motor Power switch off.	Cycle Motor Power off , then on 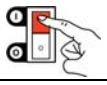 to reset breaker.
	Loose indicator cable.	Check that cable is connected at J10 pins 1 (red) and 2 (black) on control board. See page 47.
	Failed control board.	Replace board. See page 47.

PROBLEM	CAUSE	SOLUTION
A side rich; lack of B side.	A side gauge is low.	B side restriction downstream of gauge. Check gun check valve screen, mix module, or mix manifold restrictor.
	B side gauge is low.	B side material supply problem. Check B side inlet strainer and pump intake valve.
B side rich; lack of A side.	A side gauge is low.	A side material supply problem. Check A side inlet strainer and pump intake valve.
	B side gauge is low.	A side restriction downstream of gauge. Check gun check valve screen, mix module, or mix manifold restrictor.
No temperature display (heated units only).	Loose display cables on control board.	Check cable connections to each display, page 47.
	Failed control board (displays get power from control board).	Remove access panel. Check if board LED is lighted. If not, replace board, page 47.
	Inadequate power to control board.	Check that power supply meets requirements.
	Loose power cable.	Check cable connections, page 47.
	Motor Power switch circuit breaker tripped.	Display is powered from Motor Power circuit breaker. Cycle Motor Power off , then on 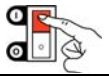 to reset breaker.
Wrong temperature displayed.	°F/°C switch in wrong position.	Set switch, see page 44.
Temperature displays do not match at ambient temperature.	Displays need calibration.	Turn calibration screw on back of displays to correct reading, see page 44.

PROBLEM	CAUSE	SOLUTION
No heat, and heater indicator light is off.	Heater Power shut off, or circuit breaker tripped.	Cycle Heater Power off , then on to reset circuit breaker.
	Bad thermostat.	With power on, check for continuity at clicks of heater control knob. To replace thermostat, see 311210.
	Bad overtemperature sensor (this is a high temperature limit fuse and must be replaced if blown).	With power on, check for continuity at overtemperature sensor. To replace sensor, see 311210.
	Loose heater cable connections.	Check connections at Heater Power switch. See FIG. 12, page 48.
No heat, but heater indicator light is on.	Bad heater cartridge.	Check for continuity at heater cartridge connections: 16-18.6 ohms for 120 V, 64-75 ohms for 240 V.
Heater on one side shuts off early or continuously during recirculation.	Y-strainer is plugged on that side.	Clean or replace strainer, page 29.
	Fluid inlet valve (52) closed.	Open valve.

Repair

Before Beginning Repair

Repairing this equipment requires access to parts which may cause electric shock or other serious injury if work is not performed properly. Have a qualified electrician connect power and ground to main power switch terminals, see page 16. Be sure to shut off all power to the equipment before repairing.

1. Flush if possible, see page 30. If not possible, clean all parts with solvent immediately after removal, to prevent isocyanate from crystallizing due to moisture in the atmosphere.

2. Set function knob to Stop/Park .

3. Shut off Motor Power. Disconnect power supply.

4. Shut off Heater Power. Allow equipment to cool before repairing.

5. Relieve pressure, page 28.

Removing Supply Tanks

Displacement pump repair and parts information is included in manual 311076, which is supplied with your unit.

1. See **Before Beginning Repair**, page 40. Relieve pressure, page 28.

2. Close both fluid inlet ball valves (52).

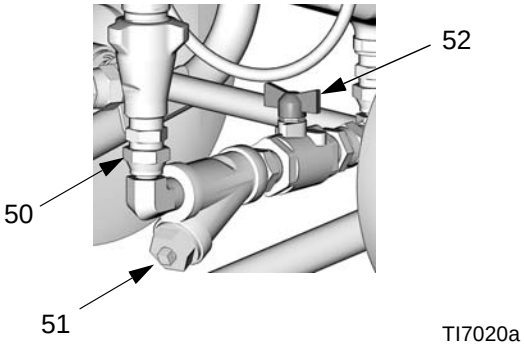

Use dropcloth or rags to protect Reactor E-10 and surrounding area from spills.

3. Open filter drain plug on Y-strainer (51).

4. Disconnect swivel elbow (50) at pump fluid inlet.

5. Remove screws (4) holding tank to cart frame.

6. Pivot top of tank to side and lift it and fluid inlet fittings off cart.

Recirc/Spray Valves

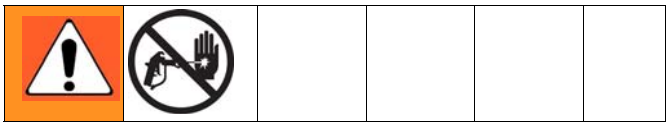

1. See **Before Beginning Repair**, page 40. Relieve pressure, page 28.
2. See FIG. 8. Disassemble Recirc/Spray valves. Clean and inspect all parts for damage. Ensure that the seat (503a) and gasket (503b) are positioned inside each valve cartridge (503).
3. Apply PTFE pipe sealant to all tapered pipe threads before reassembling.
4. Reassemble in reverse order, following all notes in FIG. 8.

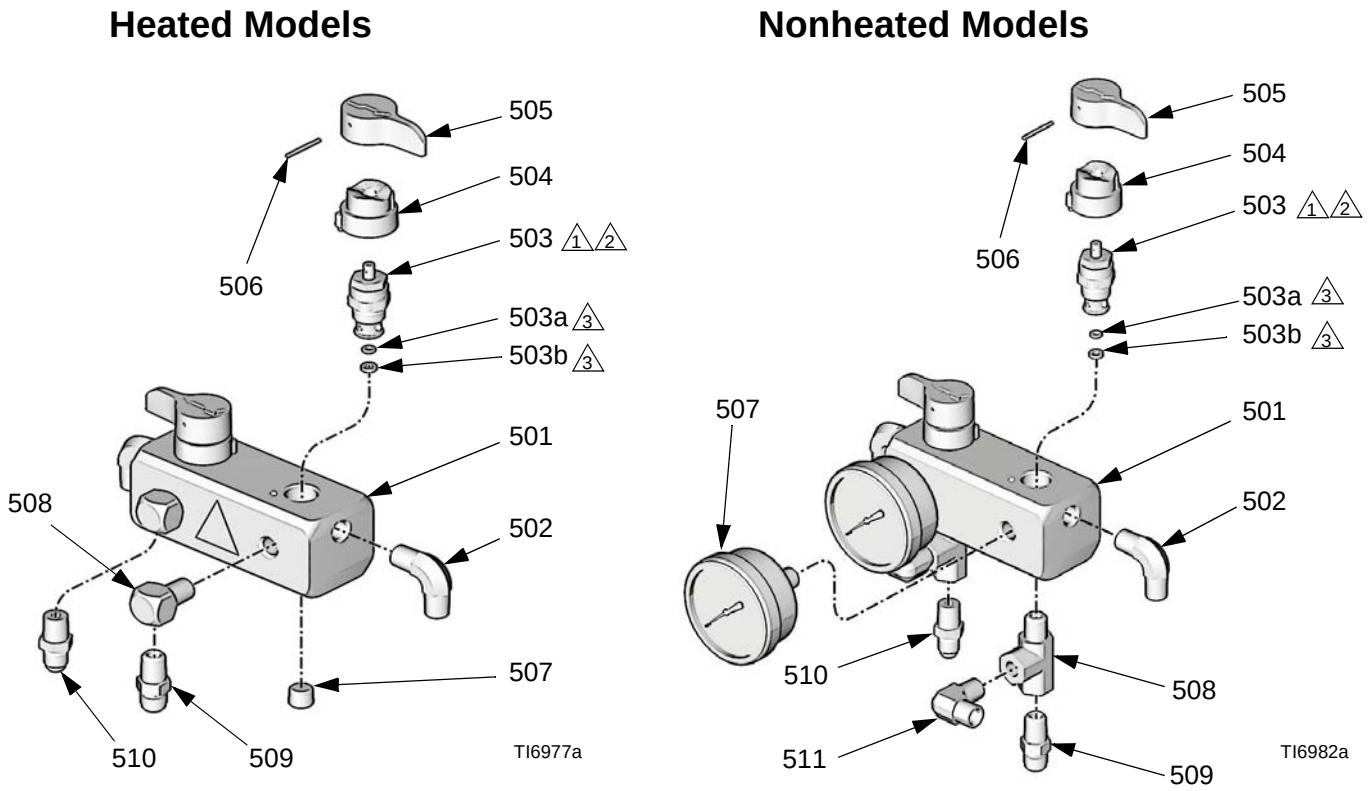

1 Torque to 250 in-lb (28 N•m).

2 Use blue threadlocker on valve cartridge threads into manifold.

3 Part of item 503.

FIG. 8. Recirc/Spray Valves

Displacement Pump

Displacement pump repair and parts information is included in manual 311076, which is supplied with your unit.

Use dropcloth or rags to protect Reactor E-10 and surrounding area from spills.

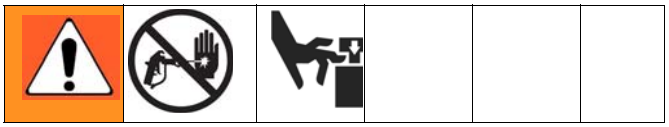

1. See **Before Beginning Repair**, page 40. Relieve pressure, page 28.

2. Close both fluid inlet ball valves (52). Open filter drain plug on Y-strainer (51).

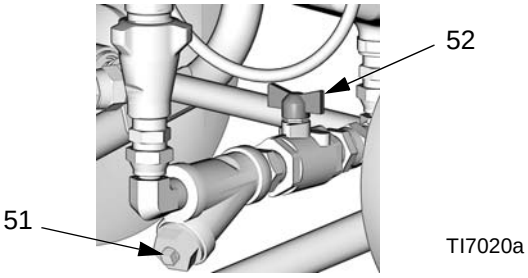

To Remove Intake Valve Only

If pump is not generating any pressure, the intake ball check may be stuck closed with dried material.

If the pump is not generating pressure on the downstroke, intake ball check may be stuck open.

Either of these conditions can be serviced with the pump in place.

3. Disconnect fluid inlet (C) and swing it aside.

4. Remove intake valve by hitting ears (E) firmly right-to-left with a non-sparking hammer. Unscrew from pump. See manual 311076 for repair and parts.

To Remove Entire Pump Assembly

5. Disconnect fluid inlet (C) and outlet (D) lines. Also disconnect steel outlet tube (16) from heater inlet.

6. Remove pump rod cover (222). Push clip up in back and push pin (217) out. Loosen locknut (218) by hitting firmly right-to-left with a non-sparking hammer. Unscrew pump. See manual 311076 for pump repair and parts.

7. Install pump in reverse order of disassembly, following all notes in FIG. 9. Clean strainer (51). Reconnect fluid inlet (C) and outlet (D) lines.

8. Tighten fluid outlet fitting (D), then tighten locknut (218) by hitting firmly with a non-sparking hammer.

9. Open fluid inlet valve (52). Set function knob to Slow Recirc. Purge air and prime. See page 21.

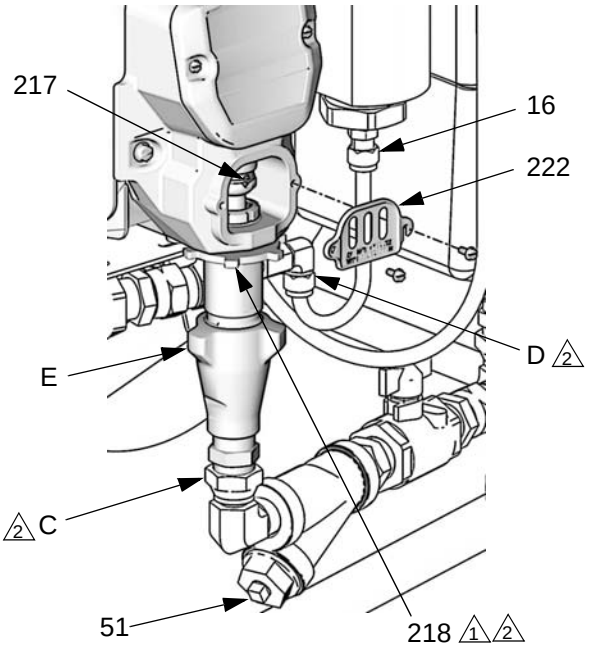

1 Flat side faces up. Tighten by hitting firmly with non-sparking hammer.

2 Lubricate threads with ISO oil or grease.

TI7025a

FIG. 9. Displacement Pump

Control Module

Change Display Temperature Units (°F/°C)

Unit is shipped with temperature displays set to °F.

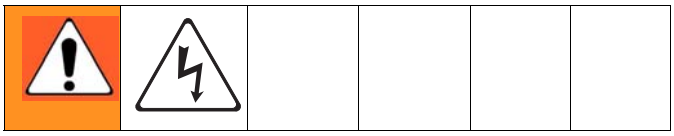

1. Shut off Motor Power. Disconnect power supply.

2. Remove access cover (39) from back of control module.
3. See FIG. 11. Locate slide switch (FC) at right edge of each temperature display board. Unit is shipped set to °F (down). To change to °C, move both switches to up position.

Calibrate Temperature Displays

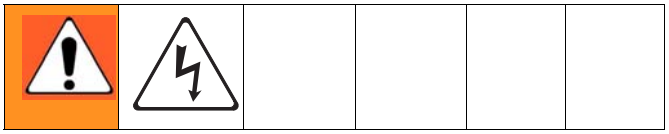

1. Remove access cover (39) from back of control module.
2. See FIG. 11. Locate calibration screw (CS) at upper right corner of each temperature display board. Turn screw slightly to correct temperature display.

Temperature displays do not read lower than 50°F (10°C).

Replace Temperature Display and Sensor (Heated Units Only)

1. See **Before Beginning Repair**, page 40. Relieve pressure, page 28.
2. Remove temperature sensor (424):
   a. Remove snap ring (66d) in thermowell housing (66e). See FIG. 10.
   b. Pull sensor (424) and spacer (66g) out of thermowell housing.
   c. Work sensor and wire out of cable channel between tanks. It may be easier to remove one tank. See page 40.
3. Remove access cover (39) from back of control module.
4. Disconnect temperature display power cable from J14 or J15 at bottom left of control board (406).
5. Remove four screws from rear panel studs and remove temperature display (403) from front plate (401).
6. Remove screw and nut (409) holding display to plate (403).
7. Pull sensor cable through split in bushing (411).

8. Reassemble in reverse order. Mount temperature display so Heater Power switch off (0) position is at left when facing control panel.

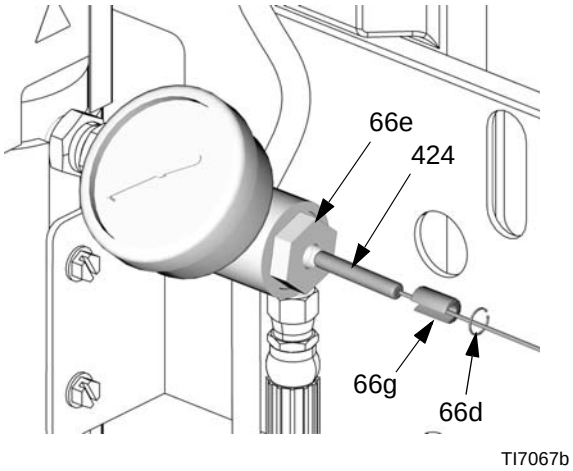

FIG. 10. Temperature Sensor

Replace Function Knob/Potentiometer

1. See **Before Beginning Repair**, page 40. Relieve pressure, page 28.

2. Remove access cover (39) from back of control module.

3. Disconnect potentiometer wires from J2 on control board (406). See FIG. 12.

4. See FIG. 11. Remove two setscrews (416a) and pull function knob (416) off potentiometer (404) shaft.

5. Remove nut (N, part of 404) and detent plate (415).

6. Install new potentiometer (404) in reverse order. Position potentiometer so slot (S) is horizontal. Position knob (416) so pointer (P) faces up. Install knob on shaft so slot (S) engages alignment pin in knob. Push knob onto shaft against detent spring before tightening setscrews (416a).

7. Reconnect potentiometer wires to J2 as shown in FIG. 12.

Detail of Function Knob/Potentiometer

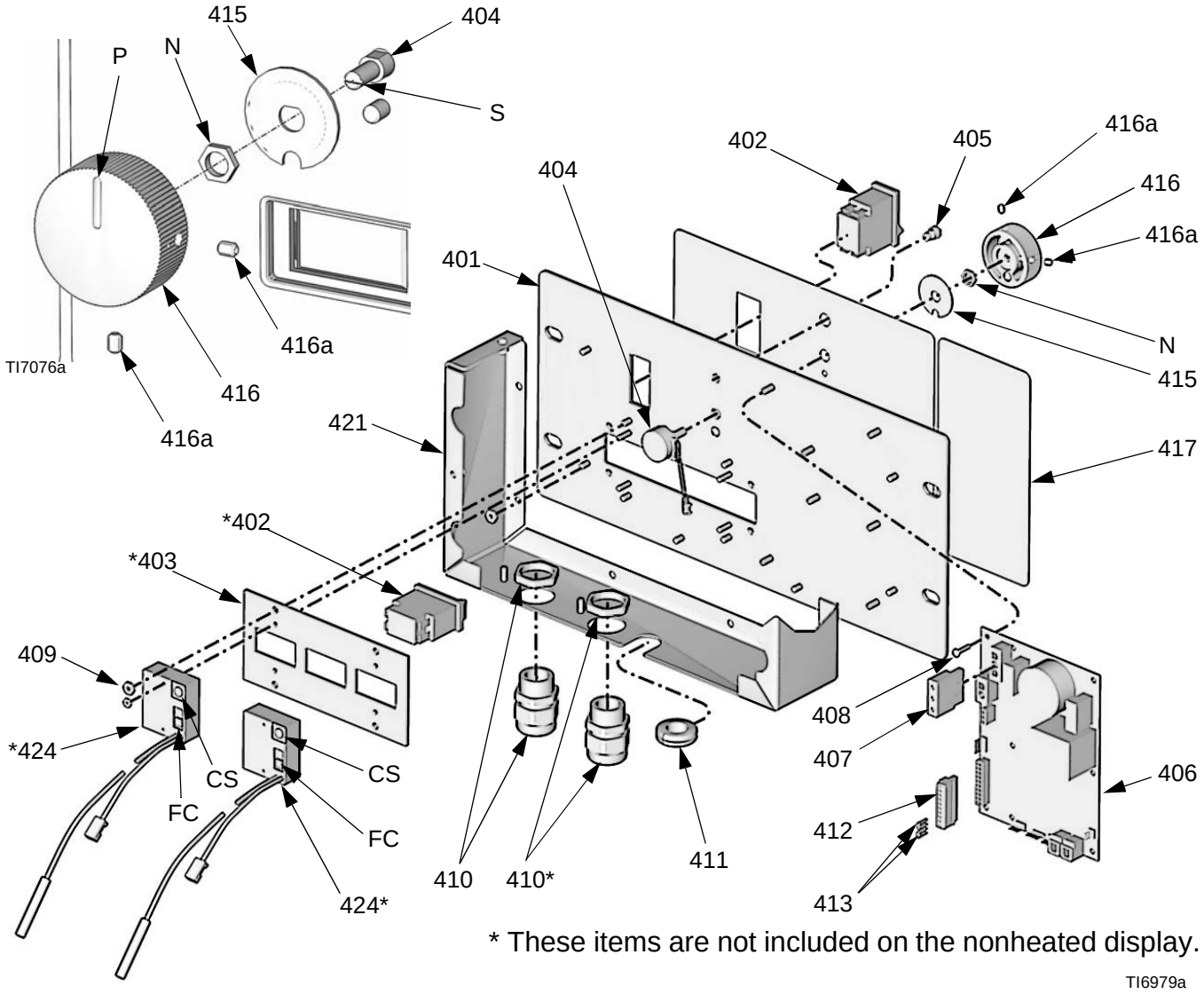

FIG. 11. Control Module (Heated Model Shown)

Control Board

Power Bootup Check

There is one red LED (D11) on the board. Power must be on to check. See FIG. 12 for location. Function is:

- Startup: 1 blink for 60 Hz, 2 blinks for 50 Hz.
- Motor running: LED on.
- Motor not running: LED off.
- Status code (motor not running): LED blinks status code.

Control Board Replacement

Check motor before replacing board. See **Electric Motor**, page 52.

1. See **Before Beginning Repair**, page 40. Relieve pressure, page 28.

2. Remove access cover (39) at back of control module to expose control board (406).

3. Disconnect all cables and connectors from board. Remove two jumper wires (413) from J10 pins 7-8 and 9-10.

4. Remove screws (408) and remove board from control module.

5. Install new board in reverse order.

Apply thermal compound between the square steel piece on the back of the board and the main aluminum plate. Order Part No. 110009 Thermal Compound.

Table 6: Control Board Connectors (see FIG. 12)

Board Jack	Pin	Description
J1	n/a	Main power from breaker
J2	n/a	Function knob
J3	n/a	Transducer A
J4	n/a	Motor power (230 V units)
J7	1, 2	Motor thermal overload signal
J8	n/a	Transducer B
J9	n/a	Fan
J10	1, 2	Status indicator
	3, 4	Not used
	5, 6	Cycle switch signal
	7-8	Jumpered
	9-10	Jumpered
J11	n/a	Motor power (120 V)
J14	n/a	B temperature display
J15	n/a	A temperature display

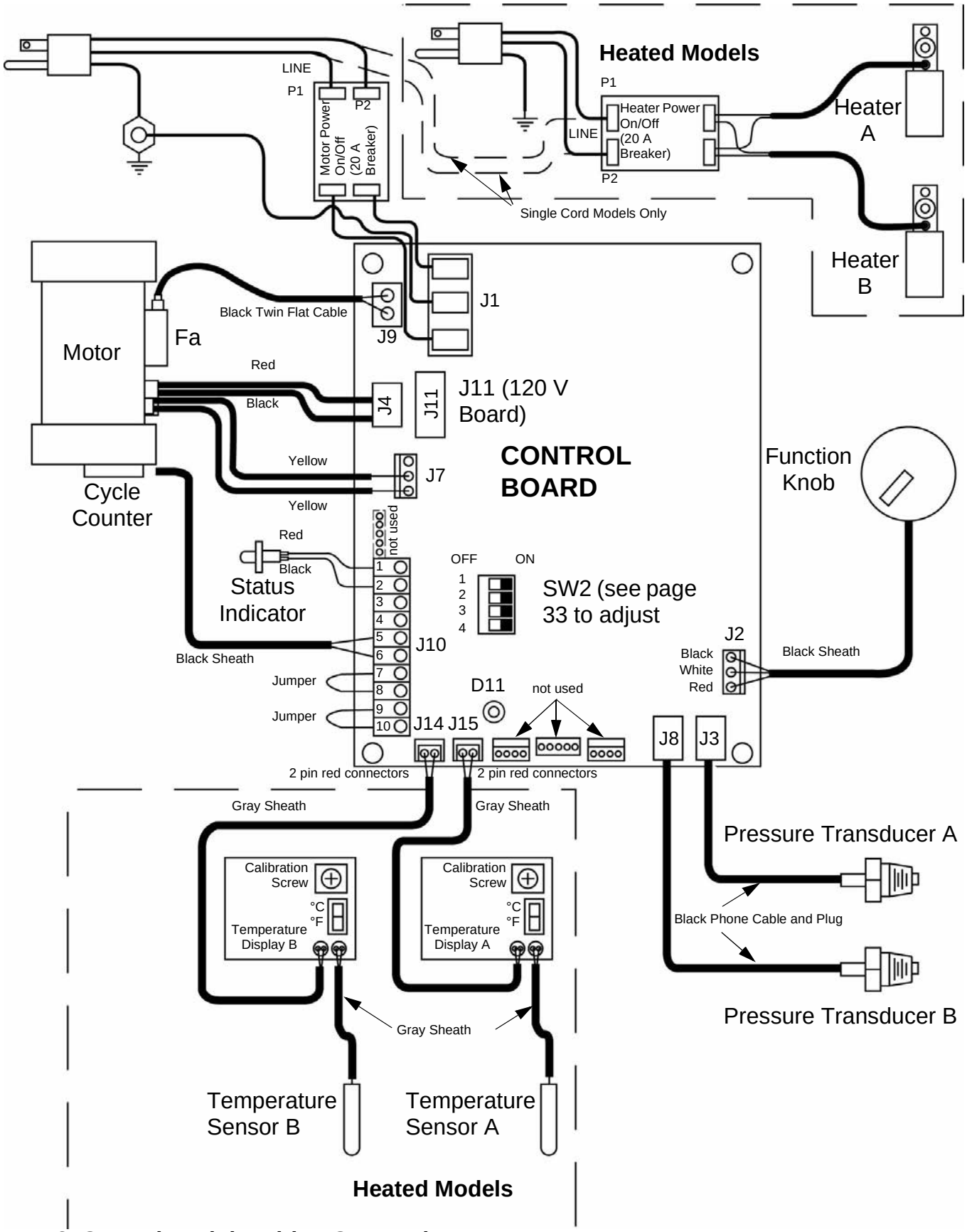

FIG. 12. Control Module Wiring Connections

Fluid Heaters (if supplied)

Fluid heater repair and parts information is included in manual 311210, which is supplied with heated units.

To replace a pressure transducer, see at right.

1. See **Before Beginning Repair**, page 40. Relieve pressure, page 28.

2. Control section of heater can be repaired in place. Remove heater to clean fluid section. See manual 311210 for heater repair and parts.

Pressure Transducers

1. See **Before Beginning Repair**, page 40. Relieve pressure, page 28.

2. Remove access cover (39) at back of control module to expose control board (406).

3. Disconnect transducer cables from J3 and J8 at board; see FIG. 12, page 48. Reverse A and B connections and check if status code follows the bad transducer, page 33.

4. Reconnect good transducer to proper connector. Disconnect failed transducer from board, and unscrew from base of fluid heater (heated units) or transducer manifold (nonheated units).

5. Install o-ring (60) on new transducer (58), FIG. 13.

6. Install transducer in heater or manifold. Mark board end of cable with tape (red=transducer A, blue=transducer B).

7. Route cable through channel to control module.

8. Connect transducer cable at board; see FIG. 12, page 48.

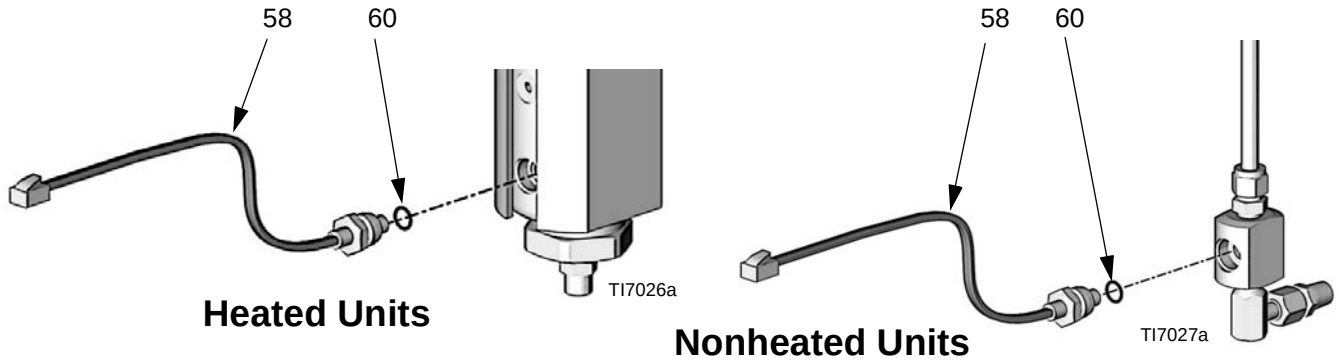

FIG. 13. Transducers

Drive Housing

Removal

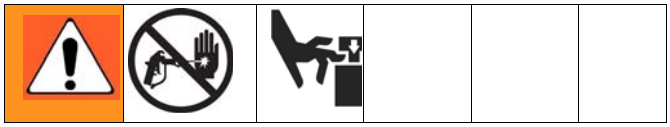

1. See **Before Beginning Repair**, page 40. Relieve pressure, page 28.

2. Remove screws (207) and end covers (221, 227), FIG. 14.

   Examine connecting rod (216). If rod needs replacing, first remove the pump (219), page 42.

NOTICE
Do not drop gear reducer (214) and crankshaft (210) when removing drive housing (215). These parts may stay engaged in motor end bell (MB) or may pull away with drive housing.

3. Disconnect pump inlet and outlet lines. Remove screws (220) and pull drive housing (215) off motor (201) Connecting rod (216) will disengage from crankshaft (210).

4. Examine crankshaft (210), gear reducer (214), thrust washers (208, 212), and bearings (209, 211, 213).

Installation

1. Apply grease liberally to washers (208, 212), bearings (209, 211, 213), gear reducer (214), crankshaft (210), and inside drive housing (215). Grease is supplied with replacement parts kits.

   B side crankshaft (210) includes the cycle counter magnet (224). When reassembling, be sure to install crankshaft with magnet on B side.

   If replacing crankshaft, remove magnet (224). Reinstall magnet in center of offset shaft on new crankshaft. Position shaft in Park position.

2. Install bronze bearings (211, 213) in drive housing (215), as shown.

3. Install bronze bearings (209, 211) and steel washer (208) on crankshaft (210). Install bronze bearing (213) and steel washer (212) on gear reducer (214).

4. Install gear reducer (214) and crankshaft (210) into motor end bell (MB).

   Crankshaft (210) must be in line with crankshaft at other end of motor. Pumps will move up and down together.

   If connecting rod (216) or pump (219) were removed, reassemble rod in housing and install pump, page 42.

5. Push drive housing (215) onto motor (201). Install screws (220).

6. Install drive housing covers (221 on A side, 227 on B side) and screws (207). Pumps must be in phase (both at same position in stroke).

Cycle Counter Switch Replacement

B side drive housing cover (227) includes the cycle counter switch (223), mounted in the cover. When reassembling, be sure to install cover with switch on B side.

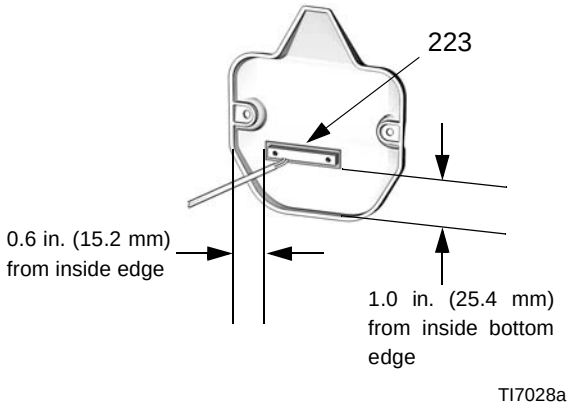

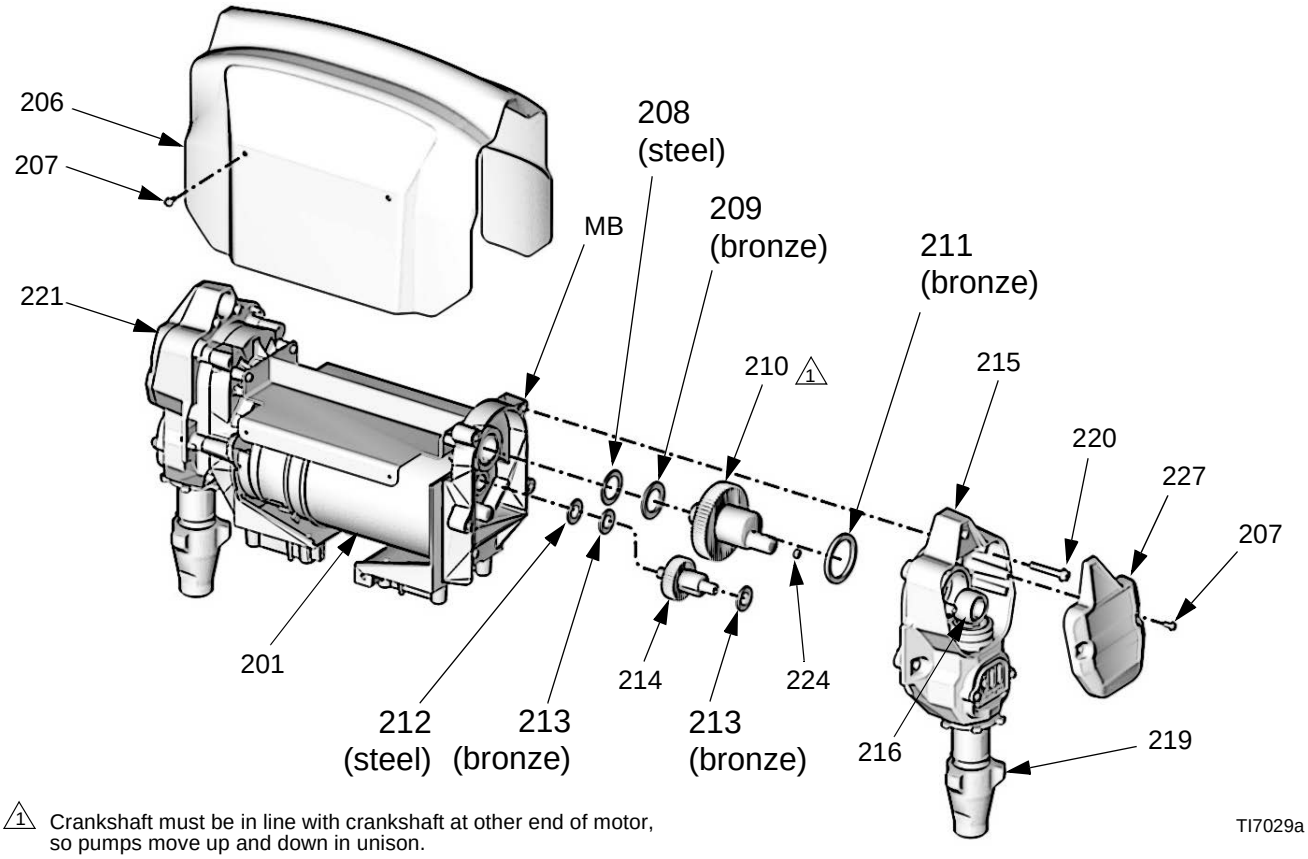

⚠1 Crankshaft must be in line with crankshaft at other end of motor, so pumps move up and down in unison.

FIG. 14. Drive Housing

Electric Motor

Test Motor

If motor is not locked up by pumps, it can be tested using a 9 V battery. Open recirculating valves, disconnect J4 or J11 from control board, see FIG. 12, page 48. Touch jumpers from battery to motor connections. Motor should turn slowly and smoothly.

Removal

If replacing a component with electrical cabling, remove one supply tank, page 40.

1. See **Before Beginning Repair**, page 40. Relieve pressure, page 28.
2. Remove four screws (207) and shroud (206). See FIG. 14.
3. Remove drive housing/pump assemblies, page 50.
4. Disconnect motor cables as follows:
   a. Find control board at back of control module, see FIG. 12, page 48.
   b. Unplug motor power connector from J4 (240 V units) or J11 (120 V units).
   c. Unplug motor temp switch harness from connector J7.
   d. Unplug cable (37) from fan (202). See FIG. 15.
   e. Thread motor power switch harness out bottom of control module and cable channel, to free motor.

NOTICE
Motor is heavy. Two people may be required to lift.

5. Remove screws holding motor to bracket. Lift motor off unit.

Installation

1. If replacing motor, install fan assembly and fan mount threaded bushing on new motor.
2. Place motor and fan on unit. Thread motor switch harness into control module.
3. Fasten motor with screws underneath. Do not tighten yet.
4. Plug 3-pin connector J7 to board.
5. Plug Motor Power switch harness to connector J4 (240 V units) or J11 (120 V units).
6. Install drive housing/pump assemblies, page 50. Reconnect inlet assemblies to pumps.
7. Tighten motor mounting screws.
8. Return to service.

Motor Brushes

Replace brushes worn to less than 1/2 in. (13 mm). Brushes wear differently on each side of motor; check both sides. Brush Repair Kit 287735 is available; kit includes instruction sheet 406582.

Motor commutator should be smooth. If not, resurface commutator or replace motor.

1. See **Before Beginning Repair**, page 40. Relieve pressure, page 28.

2. See instruction sheet 406582, included with Brush Repair Kit 287735. Remove old brushes and install new ones supplied in kit.

Fan

1. Disconnect fan cable (37) from fan (202). With Motor Power on, test cable connector for line voltage (120 V or 240 V).

2. *If voltage is correct,* fan is defective. Remove screws holding fan to shield (206). Install new fan in reverse order.

3. *If voltage is not correct,* check fan cable connection at J9 on control board; see FIG. 12, page 48.

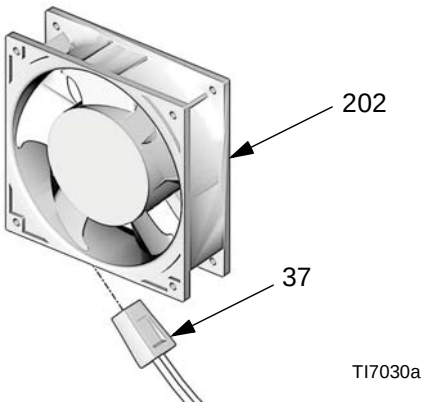

FIG. 15. Fan

Parts

Part No. AP9570 or CS9570, 120 V, 15 A, Heated Package
Part No. AP9571 or CS9571, 240 V, 10 A, Heated Package
Part No. AP9572 or CS9572, 240 V, 20 A, Heated Package

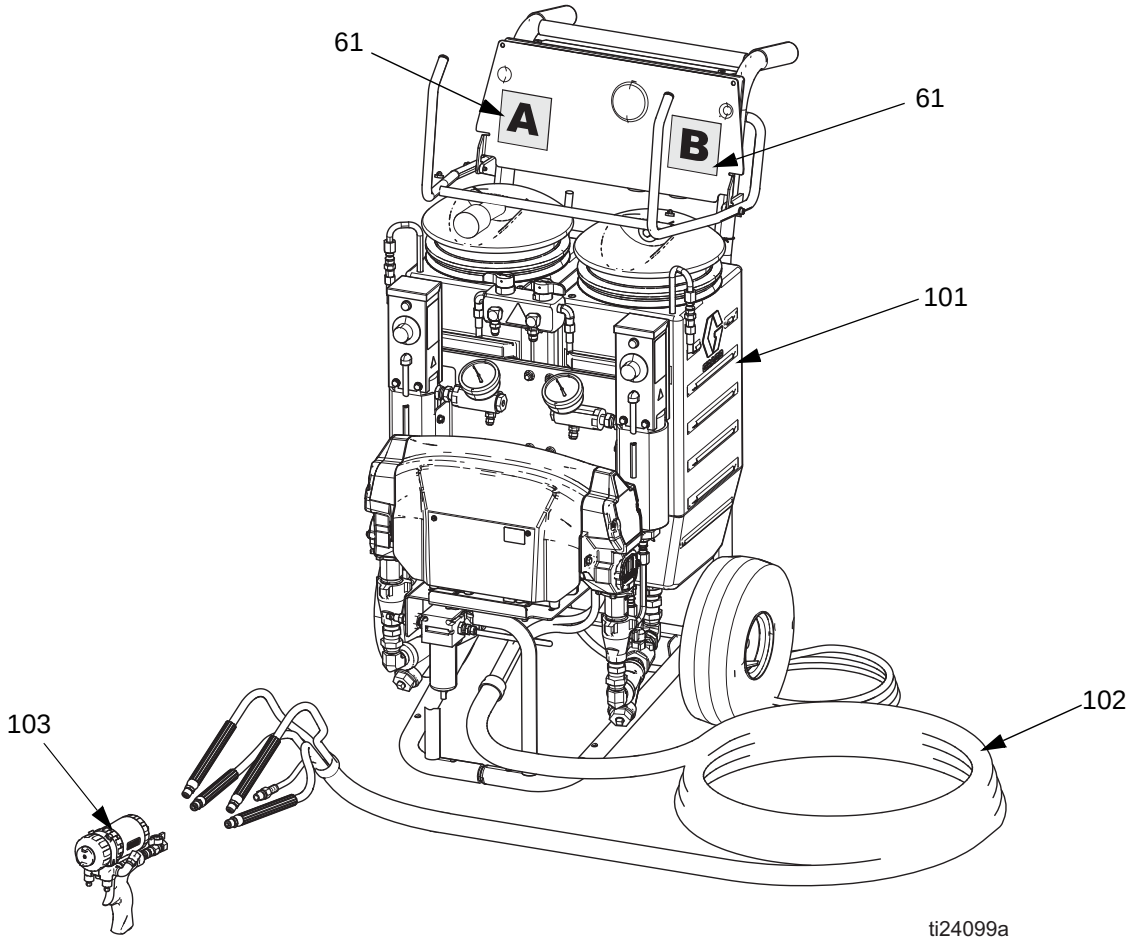

Proportioner	Description	101	102	103
AP9570	120 V, 15 A, Heated Package	249570 see page 61	249499 see page 66	249810 see 309550
CS9570				CS22WD see 312666
AP9571	240 V, 10 A, Heated Package	249571 see page 61	249499 see page 66	249810 see 309550
CS9571				CS22WD see 312666
AP9572	240 V, 20 A, Heated Package	249572 see page 61	249499 see page 66	249810 see 309550
CS9572				CS22WD see 312666

Part No. 249806, 120 V, 15 A, Nonheated Package, MD2
Part No. 249808, 240 V, 10 A, Nonheated Package, MD2
Part No. 24R984, 120 V, 15 A, Nonheated Package, 2K Dispense
Part No. 24R985, 240 V, 10 A, Nonheated Package, 2K Dispense

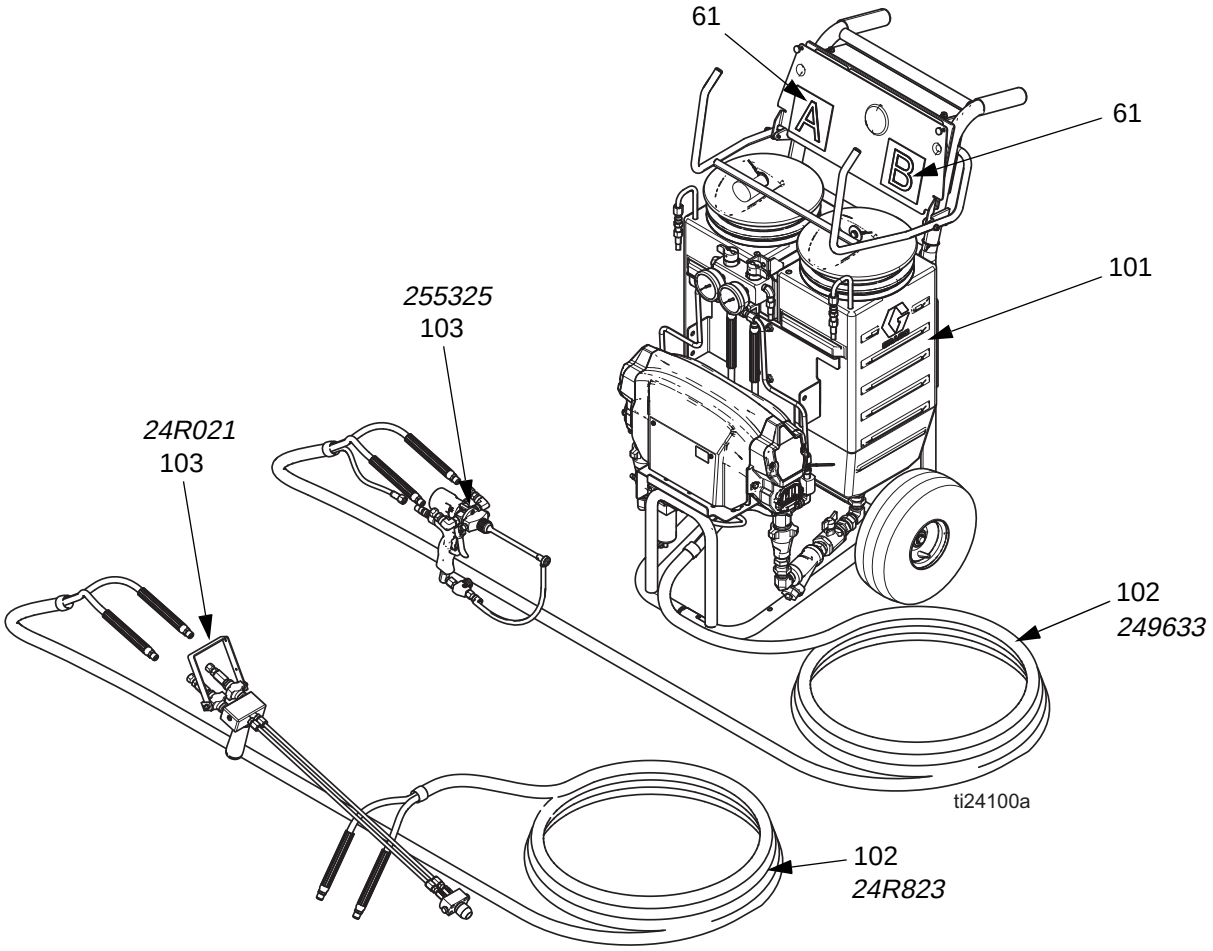

Ref.	Part	Description	Quantity			
			249806	249808	24R984	24R985
101	249576	PROPORTIONER, nonheated, 120 V, 15 A; see page 64; 249806 only	1		1	
	249577	PROPORTIONER, heated, 240 V, 10 A; see page 64; 249808 only		1		1
102	249633	HOSE BUNDLE, non-insulated; see page 66	1	1		
	24R823	HOSE BUNDLE; see page 66			1	1
103	255325	GUN, MD2 Cold Spray; see 312185 and 3A2910	1	1		
	24R021	VALVE, dispense, 2K			1	1

Parts

Part No. 25C350, 240 V, 20 A, OEM Package

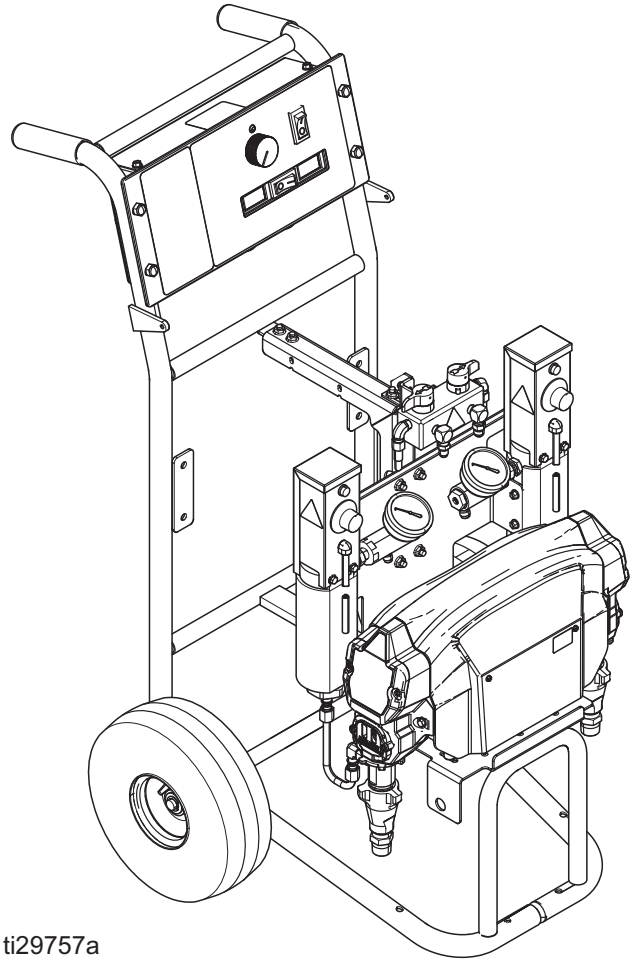

ti29757a

Part No. 249570, 120 V, 15 A, Heated Proportioner
Part No. 249571, 240 V, 10 A, Heated Proportioner
Part No. 249572, 240 V, 20 A, Heated Proportioner

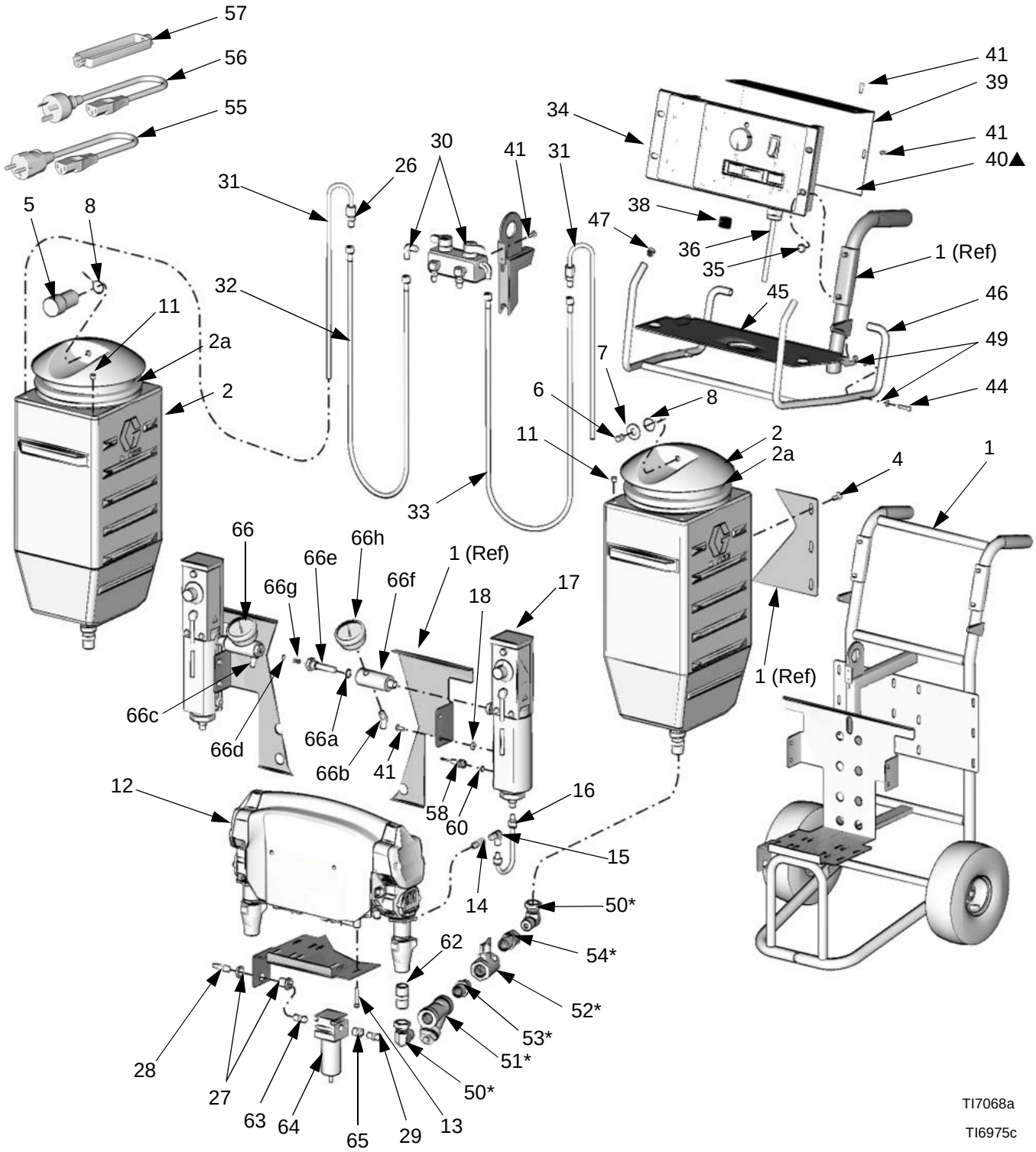

Heated Proportioners

Ref.	Part	Description	Qty.
1	24R382	CART; see page 70	1
2	24L000	TANK, with lid and outlet fitting; LDPE; includes item 2a	2
2a	15F895	. O-RING, lid, tank	1
4	111800	SCREW, cap, hex hd; 5/16-18 x 5/8 in. (16 mm)	12
5	24K984	DRYER, desiccant	1
6	24K976	MUFFLER, vent	1
7	101044	WASHER, plain; 1/2 in. (13 mm)	1
8	119973	LANYARD; 14 in. (356 mm); sst	2
11	119993	PLUG	2
12	287655	PROPORTIONER, bare, 120 V; Model 249570; see page 66	1
	287656	PROPORTIONER, bare, 240 V; Models 249571 and 249572; see page 63	1
13	117493	SCREW, machine, hex washer hd; 1/4-20 x 1-1/2 in. (38 mm)	4
14	116393	ADAPTER; 1/4 npt (m x f)	2
15	556765	ELBOW; 1/4 npt(m) x 3/8 JIC	2
16	24K998	TUBE, fluid	2
17	24L007	HEATER, fluid, 120 V; Model 249570; includes items 58 and 60; see 311210	2
	24L008	HEATER, fluid, 240 V; Models 249571 and 249572; includes items 58 and 60; see 311210	2
18	167002	INSULATOR, heat	4
26	116704	ADAPTER, B side; 3/8 JIC x 1/4 npt(m)	2
27	104641	BULKHEAD FITTING	1
28	169970	FITTING, air line; 1/4 npt(m)	1
29	162453	NIPPLE; 1/4 npt x 1/4 npsm	1
30	24L009	MANIFOLD, recirculation, with valves; see page 69	1
31	15V421	TUBE, recirculation; 3/8 (10 mm) OD; sst	2
32	249629	HOSE, component A (ISO); 1/4 in. (6 mm) ID; thermoplastic hose with moisture guard; 1/4 npsm(f) x 48 in. (1219 mm)	1
33	249630	HOSE, component B (RES); 1/4 in. (6 mm) ID; thermoplastic hose; 1/4 npsm(f) x 48 in. (1219 mm)	1
34	24L004	DISPLAY, heated, 120 V; Model 249570; see page 67	1
	24L005	DISPLAY, heated, 240 V; Models 249571 and 249572; see page 67	1
35	117623	NUT, cap; 3/8-16	4
36	24K995	CORD, 120 V; Model 249570	2
	24K997	CORD, 240 V; Model 249571	2
	24K996	CORD, 240 V; Model 249572	1
37	15G458	CABLE, fan; see page 66	1
38		CONDUIT, flexible; non-metallic	1
39	15G385	COVER, access, display	1
40▲	15G280	LABEL, warning	1
41	108296	SCREW, machine, hex washer hd; 1/4-20 x 5/8 in. (16 mm)	10
43	217374	LUBRICANT, ISO pump; not shown	1
44		BOLT; 10-24 x 1 in. (25 mm)	2
45	15G119	GUARD, splash	1
46	15G461	RACK, hose	1
47		PLUG	4
48	109510	STRAP, bungee; 25 in. (635 mm)	2
49		WASHER, flat; 1/4 in.; nylon	4
50*	160327	ELBOW, swivel; 3/4 npt(m) x 3/4 npsm(f)	2
51*	101078	Y-STRAINER; includes item 51a	2
51a	180199	. ELEMENT, 20 mesh; not shown	1
52*	119882	VALVE, ball; 3/4 npt (fbe), t-handle	2
53*	C20487	NIPPLE; 3/4 npt	2
54*	157785	UNION, swivel; 3/4 npt(m) x 3/4 npsm(f)	2
55	242001	ADAPTER, cord; Europe; Model 249571 only	2
56	242005	ADAPTER, cord; Australia; Model 249571 only	2
57	195551	RETAINER, plug, adapter; Model 249571 only	2
58	24K999	TRANSDUCER, pressure; included with item 17	2
60	111457	O-RING; ptfe; included with item 17	2

Ref.	Part	Description	Qty.
61	15G476	LABEL, components A and B; see page 55	2
62	119992	NIPPLE, pump inlet; 3/4 npt	2
63	157350	NIPPLE; 1/4 npt x 3/8 npt	1
64	24K977	AIR FILTER/SEPARATOR, with 3/8 npt auto drain; includes item 2a	1
64a	114228	. ELEMENT, 5 micron; polypropylene; not shown	1
65	100176	BUSHING; 3/8 npt(m) x 1/4 npt(f)	1

Ref.	Part	Description	Qty.
66	24E555	KIT, temperature sensor	2
66a	121063	O-RING, fluroroelastomer	1
66b‡	123787	FITTING, elbow, 45°; 3/8 jic x 1/4-18 npt	1
66c‡	123788	FITTING, elbow, 45°; 5/16 jic x 1/4-18 npt	1
66d	555561	RING, retaining, 3/8	1
66e	16C785	HOUSING, thermowell	1
66f	16C786	MANIFOLD, fluid	1
66g	16C787	SPACER, sensor	1
66h	113641	GAUGE, pressure, fluid; sst	1

* *Included in 287718 Pump Inlet Kit (one side).*

‡ *24E555 Kit includes “A” and “B” side adapters. Install required fittings as needed.*

▲ *Replacement Danger and Warning labels, tags, and cards are available at no cost.*

Part No. 25C350, 240 V, 20 A, OEM Proportioner

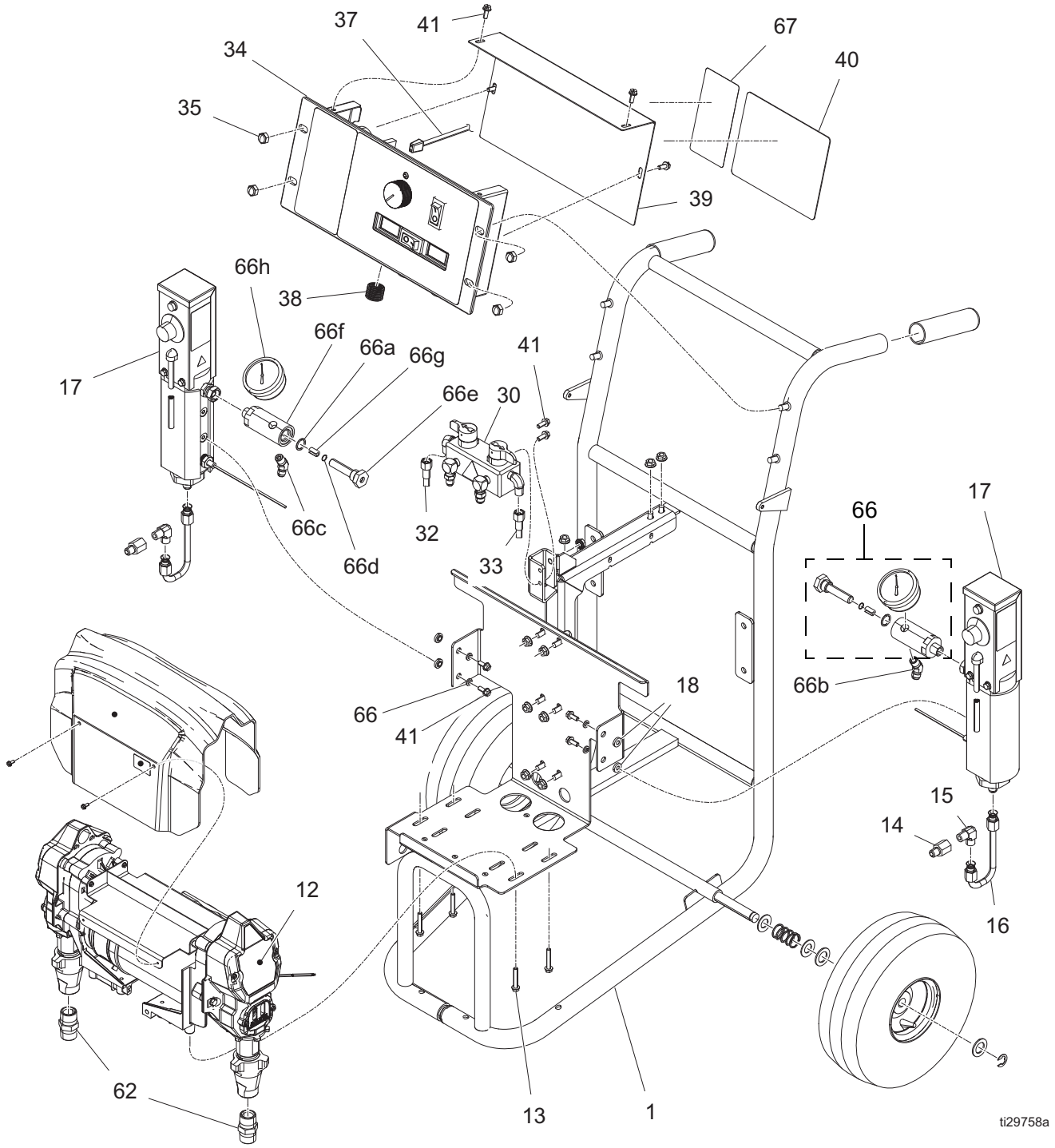

OEM Proportioner

Ref.	Part	Description	Qty.
1	24R382	CART, painted, E-10, see page 70	1
12	287656	PROPORTIONER, 240V, E10, see page 58	1
13	117493	SCREW, mach, hex washer hd	4
14	116393	FITTING, straight 1/4 npt	2
15	556765	FITTING, elbow, 3/8 t x 1/4 mp	2
16	24K998	TUBE, fluid, inlet	2
17	24L008	HEATER, fluid, 240V, E10, (see manual 311210)	2
18	167002	INSULATOR, heat	4
19	121063	O-RING, 908 viton	2
20	16C786	MANIFOLD, fluid	2
21	16C785	HOUSING, thermo sensor	2
22	16C787	SPACER, sensor	2
23	123787	FITTING, elbow, 45 deg, 3/8 jic x 1/4 npt	1
24	113641	GAUGE, pressure, fluid, sst	2
25	123788	FITTING, elbow, 45 deg, 5/16 jic x 1/4 np	1
30	287712	MANIFOLD, recirc, w/valves	1
32	249629	HOSE, cpld, 1/4 in. x 48 in., moistguard	1
33	249630	HOSE, cpld, 1/4 in. x 48 in., resin	1
34	24L005	DISPLAY, E-10, heated, 240V	1
35	117623	NUT, cap (3/8-16)	4
36	24K997	CORD, 240 V-20A	1
37	15G458	CABLE, fan, 46 in. with plug/board conn, see page 58	1
38	114601	CONDUIT, flexible, non-metallic	1
39	15G385	COVER, access, display, E10, paint	1
40▲	15G280	LABEL, safety, warning, multiple	1
41	108296	SCREW, mach, hex wash hd	10
43	217374	LUBRICANT, iso pump	1
48	109510	STRAP, rubber	2
58	24K999	FITTING, pipe, nipple, 3/4 x 3/4 npt	2
66	100016	WASHER, lock	4
66a	121063	O-RING, fluroelastomer	1
66b	123787	FITTING, elbow, 45°; 3/8 jic x 1/4-18 npt	1
66c	127788	FITTING, elbow, 45°; 5/16 jic x 1/4-18 npt	1
66d	555561	RING, retaining, 3/8	1
66e	16C785	HOUSING, thermowell	1
66f	16C786	MANIFOLD, fluid	1
66g	16C787	SPACER, sensor	1
66h	113643	GAUGE, pressure, fluid, sst	1
67	15G719	LABEL, status codes, E-10	1
77	15W625	LABEL, cord	1
82	555561	RING, retainer -37 basic int	2

▲ *Replacement Danger and Warning labels, tags, and cards are available at no cost.*

‡ *24E555 Kit includes “A” and “B” side adapters. Install required fittings as needed.*

Part No. 287655, 120 V Bare Proportioner
Part No. 287656, 240 V Bare Proportioner

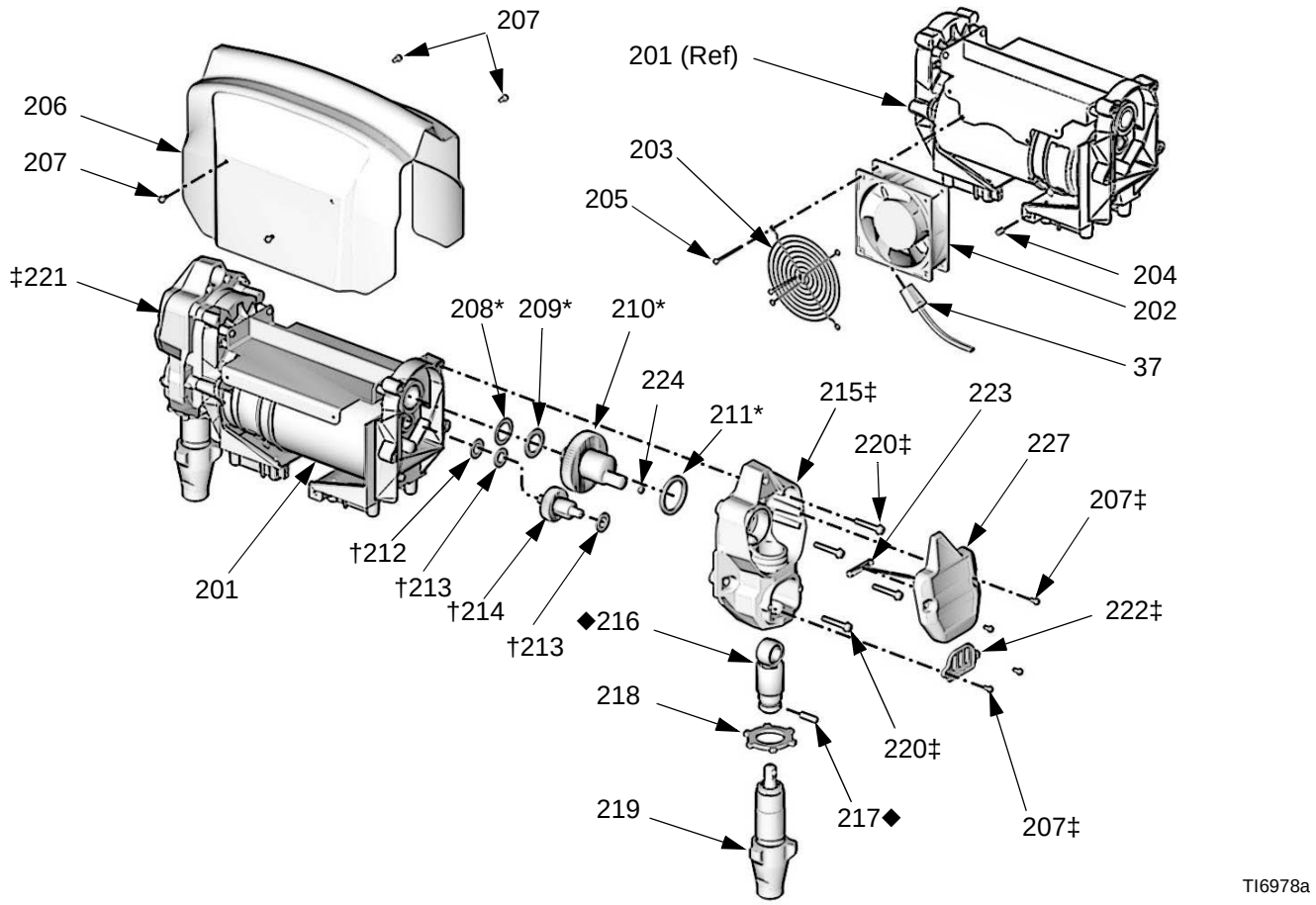

Ref.	Part	Description	Qty
201	24E355	MOTOR, electric; 120 V	1
	24E356	MOTOR, electric; 240 V	
202	24K985	FAN, cooling; 120 V	1
	24K986	FAN, cooling; 240 V	1
203	115836	GUARD, finger	1
204		RIVET, blind; 5/32 x 3/8 grip	1
205		SCREW, machine, slotted hd; 8-32 x 2 in. (51 mm)	3
206	24L003	SHIELD, proportioner	1
207‡	115492	SCREW, machine, hex washer hd; 8-32 x 3/8 in. (10 mm)	12
208*	116074	WASHER, thrust; steel	2
209*	107434	BEARING, thrust; bronze	2
210*	248231	CRANKSHAFT KIT	2
211*	180131	BEARING, thrust; bronze	2
212†	116073	WASHER, thrust; steel	2
213†	116079	BEARING, thrust; bronze	4
214†	287057	GEAR REDUCER KIT	2
215‡	287055	DRIVE HOUSING KIT	2
216◆	287053	CONNECTING ROD KIT	2
217◆	196762	PIN, straight	2
218	195150	NUT, jam, pump	2
219	24L006	PUMP, displacement; see 311076	2
220‡	117493	SCREW, machine, hex washer hd; 1/4-20 x 1-1/2 in. (38 mm)	8
221‡	15B254	COVER, drive housing, A side	1
222‡	15B589	COVER, pump rod	2
223	117770	SWITCH, reed, w/cable	1
224	24K982	MAGNET	1
227	249854	COVER, drive housing, B side; includes item 223 and 228	1
228	115711	TAPE, mounting, reed switch; not shown	1

* *Included in 248231 Crankshaft Kit.*

† *Included in 287057 Gear Reducer Kit.*

‡ *Included in 287055 Drive Housing Kit.*

◆ *Included in 287053 Connecting Rod Kit.*

Part No. 249576, 120 V, Nonheated Proportioner
Part No. 249577, 240 V, Nonheated Proportioner

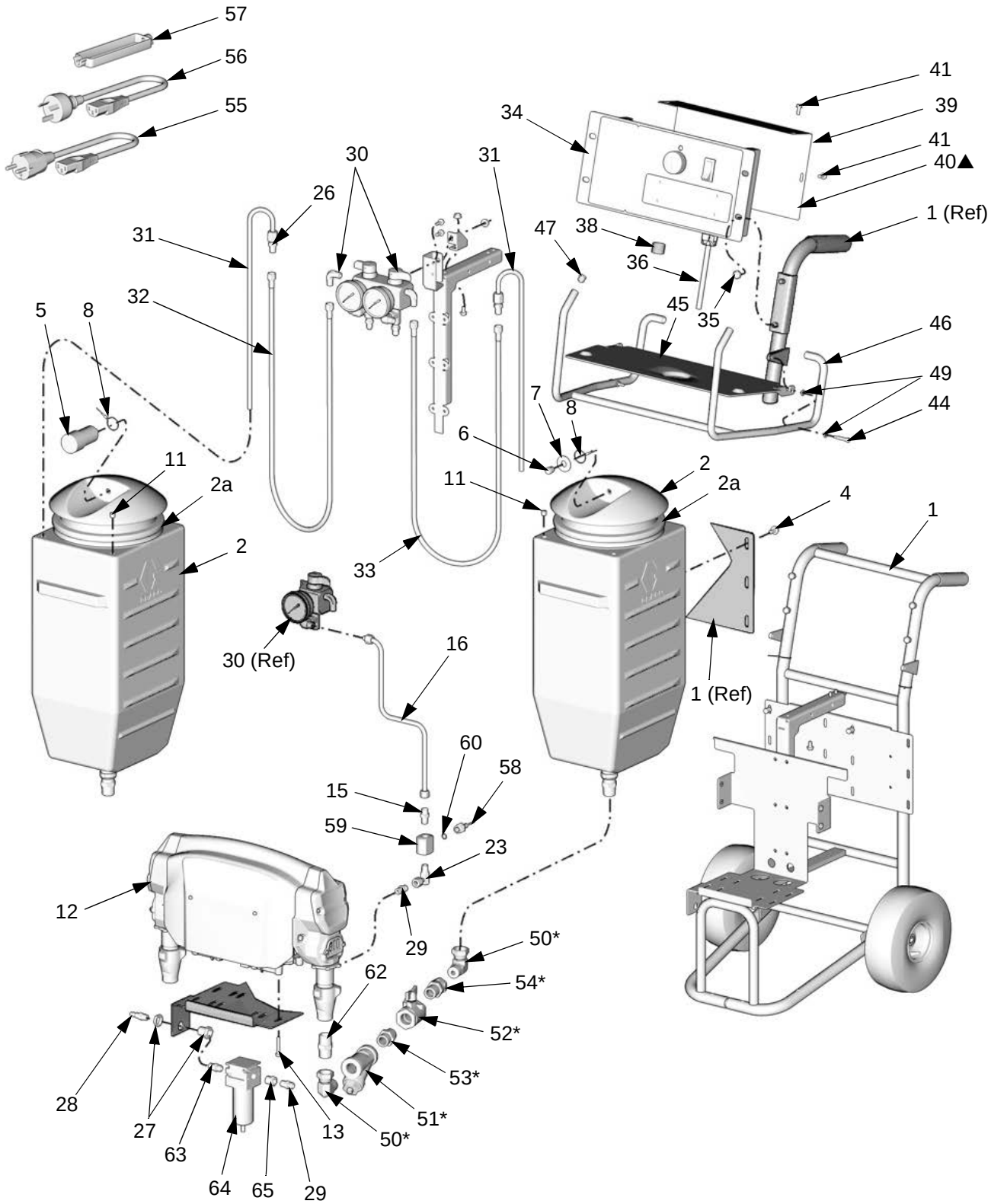

Nonheated Proportioners

Ref.	Part	Description	Qty
1	24R382	CART; see page 70	1
2	24L000	TANK, with lid and outlet fitting; LDPE; includes item 2a	2
2a	15F895	. O-RING, lid, tank	1
4	111800	SCREW, cap, hex hd; 5/16-18 x 5/8 in. (16 mm)	12
5	24K984	DRYER, desiccant	1
6	24K976	MUFFLER, vent	1
7	101044	WASHER, plain; 1/2 in. (13 mm)	1
8	119973	LANYARD; 14 in. (356 mm); sst	2
11	119993	PLUG	2
12	287655	PROPORTIONER, bare, 120 V; Model 249576; see page 66	1
	287656	PROPORTIONER, bare, 240 V; Model 249577; see page 63	1
13	117493	SCREW, machine, hex washer hd; 1/4-20 x 1-1/2 in. (38 mm)	4
15	116702	UNION; 1/4 npt(m) x 3/8 JIC	2
16	15V420	TUBE, fluid	2
23	126960	ELBOW, swivel; 1/4 npt(m) x 1/4 npsm(f)	2
25	119998	ADAPTER, A side; 1/2 JIC x 1/4 npt(m)	1
26	116704	ADAPTER, B side; 3/8 JIC x 1/4 npt(m)	3
27	104641	BULKHEAD FITTING	1
28	169970	FITTING, air line; 1/4 npt(m)	1
29	C20479	NIPPLE; 1/4 npt x 1/4 npsm	3
30	287755	MANIFOLD, recirculation, with valves; see page 69	1
31	15V421	TUBE, recirculation; 3/8 (10 mm) OD; sst	2
32	249629	HOSE, component A (ISO); 1/4 in. (6 mm) ID; thermoplastic hose with moisture guard; 1/4 npsm(f) x 48 in. (1219 mm)	1
33	249630	HOSE, component B (RES); 1/4 in. (6 mm) ID; thermoplastic hose; 1/4 npsm(f) x 48 in. (1219 mm)	1
34	249537	DISPLAY, nonheated, 120 V; Model 249576; see page 68	1
	249538	DISPLAY, nonheated, 240 V; Model 249577; see page 68	1
35	117623	NUT, cap; 3/8-16	4
36	24K995	CORD, 120 V; Model 249576	1
	24K997	CORD, 240 V; Model 249577	1
37	15G458	CABLE, fan; see page 66	1
38		CONDUIT, flexible; non-metallic	1
39	15G385	COVER, access, display	1
40▲	15G280	LABEL, warning	1
41	108296	SCREW, machine, hex washer hd; 1/4-20 x 5/8 in. (16 mm)	6
43	217374	LUBRICANT, ISO pump; not shown	1
44		BOLT; 10-24 x 1 in. (25 mm)	2
45	15G119	GUARD, splash	1
46	15G461	RACK, hose	1
47		PLUG	4
48	109510	STRAP, bungee; 25 in. (635 mm)	2
49		WASHER, flat; 1/4 in.; nylon	4
50*	160327	ELBOW, swivel; 3/4 npt(m) x 3/4 npsm(f)	2
51*	101078	Y-STRAINER; includes item 51a	2
51a	180199	. ELEMENT, 20 mesh; not shown	1
52*	119882	VALVE, ball; 3/4 npt (fbe), t-handle	2
53*	C20487	NIPPLE; 3/4 npt	2
54*	157785	UNION, swivel; 3/4 npt(m) x 3/4 npsm(f)	2
55	242001	ADAPTER, cord; Europe; Model 249577 only	1
56	242005	ADAPTER, cord; Australia; Model 249577 only	1
57	195551	RETAINER, plug, adapter; Model 249577 only	1
58	24K999	TRANSDUCER, pressure	2
59	15G292	MANIFOLD, pressure transducer	2
60	111457	O-RING; ptfe	2
61	15G476	LABEL, components A and B; see page 56	2
62	119992	NIPPLE; 3/4 npt	2
63	157350	NIPPLE; 1/4 npt x 3/8 npt	1
64	24K977	AIR FILTER/SEPARATOR, with 3/8 npt auto drain; includes item 2a	1
64a	15D909	. ELEMENT, 5 micron; polypropylene; not shown	1
65	100176	BUSHING; 3/8 npt(m) x 1/4 npt(f)	1

* *Included in 287718 Pump Inlet Kit (one side).*

▲ *Replacement Danger and Warning labels, tags, and cards are available at no cost.*

Part No. 249499, Insulated Hose Bundle with recirculation lines

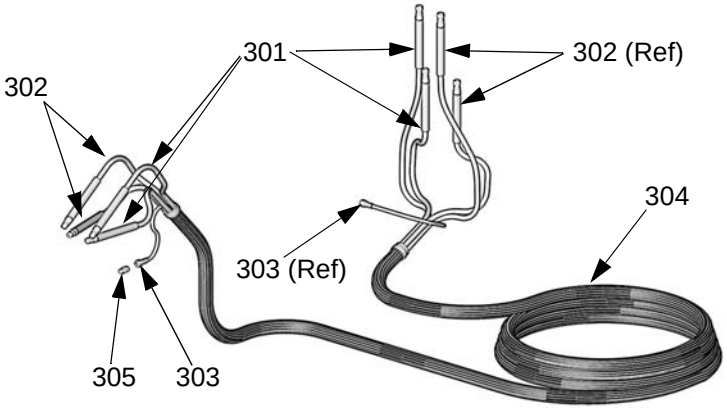

TI6991a

Ref.	Part	Description	Qty
301	249508	HOSE, fluid (component A), moisture guard; 1/4 in. (6 mm) ID; no. 5 JIC fittings (mxf); 35 ft (10.7 m)	2
302	249509	HOSE, fluid (component B); 1/4 in. (6 mm) ID; no. 6 JIC fittings (mxf); 35 ft (10.7 m)	2
303	15G342	HOSE, air; 1/4 in. (6 mm) ID; 1/4 npsm (fbe); 35 ft (10.7 m)	1
304	buy locally	TUBE, foam, insulated; 1-3/8 in. (35 mm) ID; 31 ft (9.5 m)	1
305	156971	NIPPLE; 1/4 npt; for joining air line to another hose bundle	1

Part No. 249633, Non-insulated Hose Bundle without recirculation lines

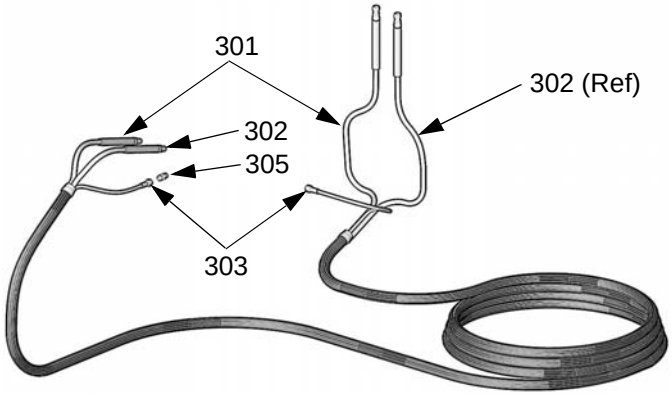

TI6992a

Ref.	Part	Description	Qty
301	249508	HOSE, fluid (component A), moisture guard; 1/4 in. (6 mm) ID; no. 5 JIC fittings (mxf); 35 ft (10.7 m)	1
302	249509	HOSE, fluid (component B); 1/4 in. (6 mm) ID; no. 6 JIC fittings (mxf); 35 ft (10.7 m)	1
303	15G342	HOSE, air; 1/4 in. (6 mm) ID; 1/4 npsm (fbe); 35 ft (10.7 m)	1
305	156971	NIPPLE; 1/4 npt; for joining air line to another hose bundle	1

Part No. 24R823, 1/4 in. (6 mm) ID x 35 ft (10.7 m) Non-insulated Hose Bundle without Recirculation Lines and Air Hose

Ref.	Part	Description	Qty
301	249508	HOSE, fluid (component A); 1/4 in. (6 mm) ID, 35 ft (10.7 m), 1/2-20 UNF, moisture guard, static dissipative	1
302	249509	HOSE, fluid (component B); 1/4 in. (6 mm) ID, 35 ft (10.7 m), 9/16-18 UNF, moisture guard, static dissipative	1

Part No. 24L004, 120 V Heated Display
Part No. 24L005, 240 V Heated Display

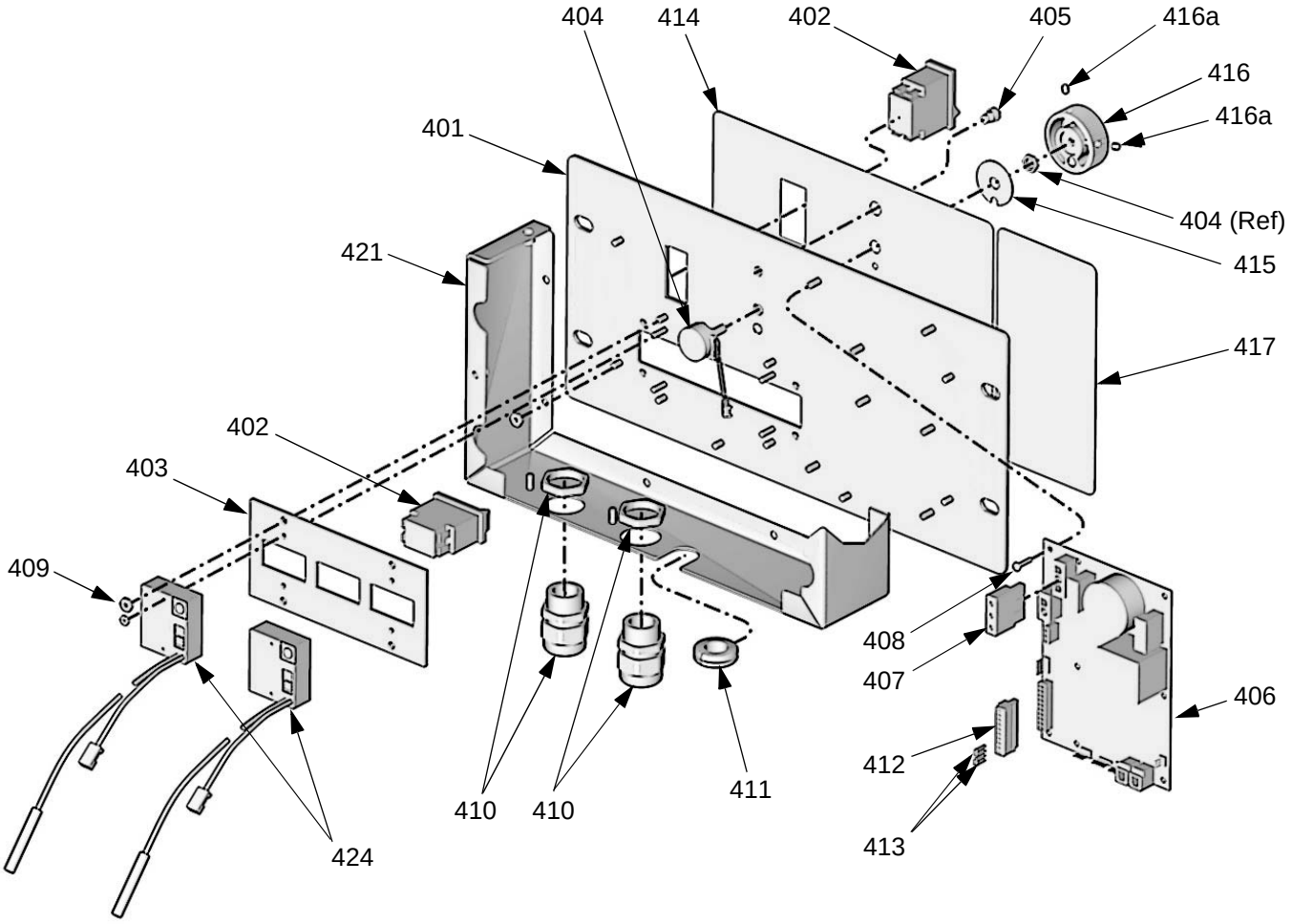

TI6979a

Ref.	Part	Description	Qty
401	15F984	PLATE	1
402	24K983	SWITCH, motor or heater power, with circuit breaker	2
403	15G386	MODULE, display, temperature; includes (1) item 402 and (2) item 424	1
404	24L002	POTENTIOMETER	1
405	119930	INDICATOR, status, LED	1
406	24G886	BOARD, control; 120 V units only	1
	24G887	BOARD, control; 240 V units only	1
407	15G230	CABLE, harness	1
408	107156	SCREW, machine, pan hd	7
409	113505	NUT, keps, hex hd	10
410	119898	BULKHEAD FITTING, cable	2

Ref.	Part	Description	Qty
411	101765	GROMMET	1
412	116773	CONNECTOR, plug	1
413	15C866	WIRE, jumper	2
414	15G279	LABEL, display	1
415	15G053	PLATE, detent	1
416	24L001	KNOB, function; includes item 416a	1
416a	101118	. SCREW, set; no. 10 x 1/4 in. (6 mm)	2
417	15G454	LABEL, startup, heated	1
421	15G384	ENCLOSURE	1
424	24K981	DISPLAY, temperature, with sensor	2
425		DUAL TERMINAL; not shown	2

Part No. 249537, 120 V Nonheated Display
Part No. 249538, 240 V Nonheated Display

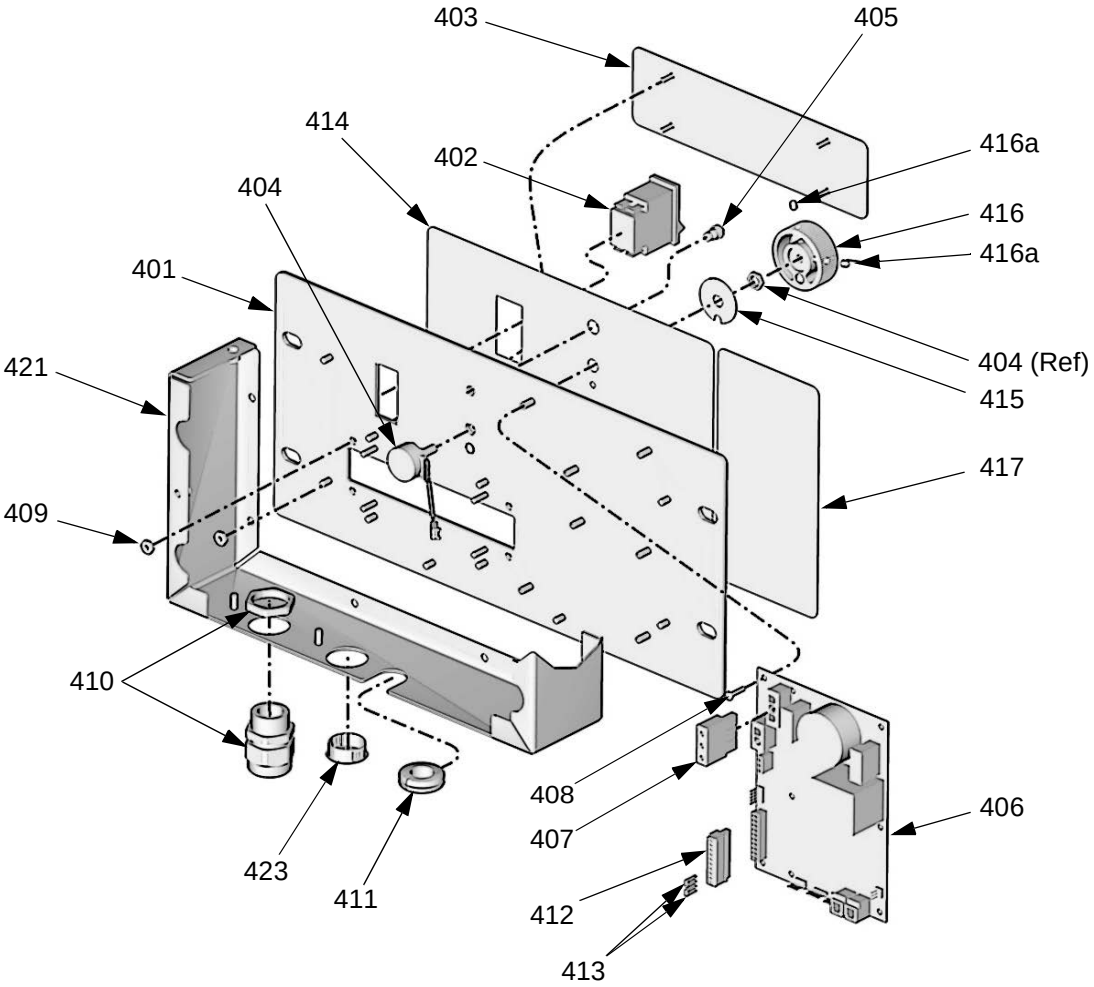

Ref.	Part	Description	Qty
401	15F984	PLATE	1
402	24K983	SWITCH, motor power, with circuit breaker	1
403	15G408	COVER, display	1
404	24L002	POTENTIOMETER	1
405	119930	INDICATOR, status, LED	1
406	24G886	BOARD, control; 120 V units only	1
	24G887	BOARD, control; 240 V units only	1
407	15G230	CABLE, harness	1
408	107156	SCREW, machine, pan hd	7
409	113505	NUT, keps, hex hd	10
410	119897	BULKHEAD FITTING, cable	1
411	101765	GROMMET	1
412	116773	CONNECTOR, plug	1
413		WIRE, jumper	2

Ref.	Part	Description	Qty
414	15G279	LABEL, display	1
415	15G053	PLATE, detent	1
416	24L001	KNOB, function; includes item 416a	1
416a	101118	. SCREW, set; no. 10 x 1/4 in. (6 mm)	2
417	15G281	LABEL, startup, unheated	1
421	15G384	ENCLOSURE	1
423		PLUG	1

Part No. 24L009 Recirculation Manifold, Heated Models

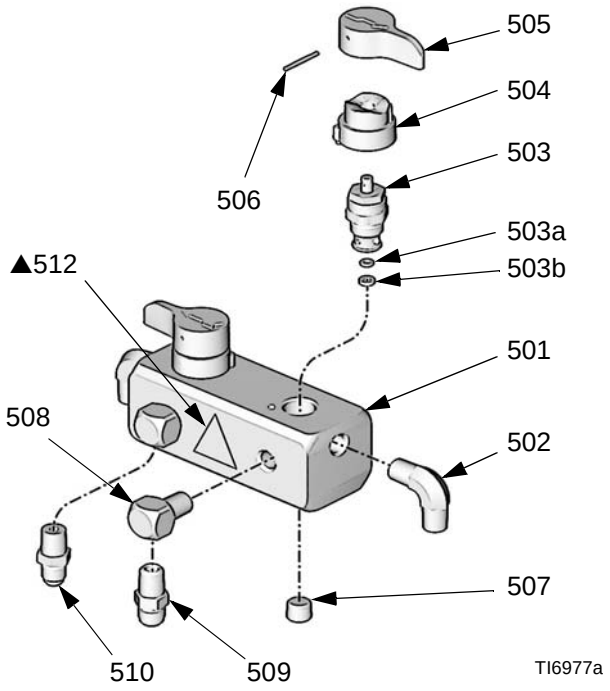

Ref.	Part	Description	Qty
501	24K993	MANIFOLD, recirculation	1
502	111763	ELBOW; 1/4 npt (mbe)	2
503	239914	VALVE, recirc/spray; includes items 503a, 503b	2
503a	15E022	. SEAT	1
503b	111699	. GASKET	1
504	224807	BASE, valve	2
505	187625	HANDLE, valve, drain	2
506	111600	PIN, grooved	2
507	100721	PLUG, pipe; 1/4 npt(m)	2
508	100840	ELBOW, street; 1/4 npt(m) x 1/4 npsm(f)	2
509	116704	ADAPTER; 3/8 JIC x 1/4 npt(m)	1
510	119998	ADAPTER; 5/16 JIC x 1/4 npt(m)	1
512▲	189285	LABEL, warning	1

▲ *Replacement Danger and Warning labels, tags, and cards are available at no cost.*

Part No. 287755 Recirculation Manifold, Nonheated Models

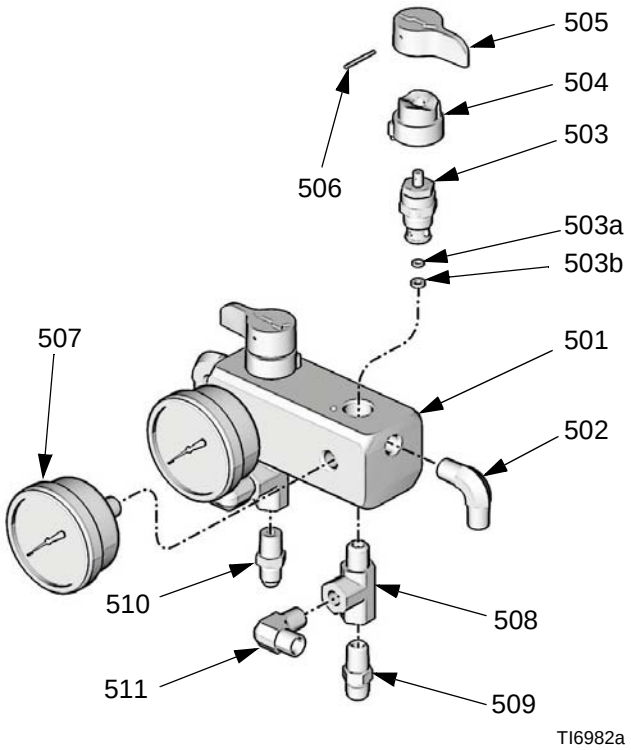

Ref.	Part	Description	Qty
501	24K993	MANIFOLD, recirculation	1
502	111763	ELBOW; 1/4 npt (mbe)	4
503	239914	VALVE, recirc/spray; includes items 503a, 503b	2
503a	15E022	. SEAT	1
503b	111699	. GASKET	1
504	224807	BASE, valve	2
505	187625	HANDLE, valve, drain	2
506	111600	PIN, grooved	2
507	113641	GAUGE, pressure, fluid	2
508	116504	TEE; 1/4 npt(m) x 1/4 npt(f) run; 1/4 npt(f) branch	2
509	116704	ADAPTER; 3/8 JIC x 1/4 npt(m)	1
510	119998	ADAPTER; 5/16 JIC x 1/4 npt(m)	1
511	556765	ELBOW, tube; 1/4 npt(m) x 3/8 in. (10 mm) OD tube	2

Part No. 249582, Cart

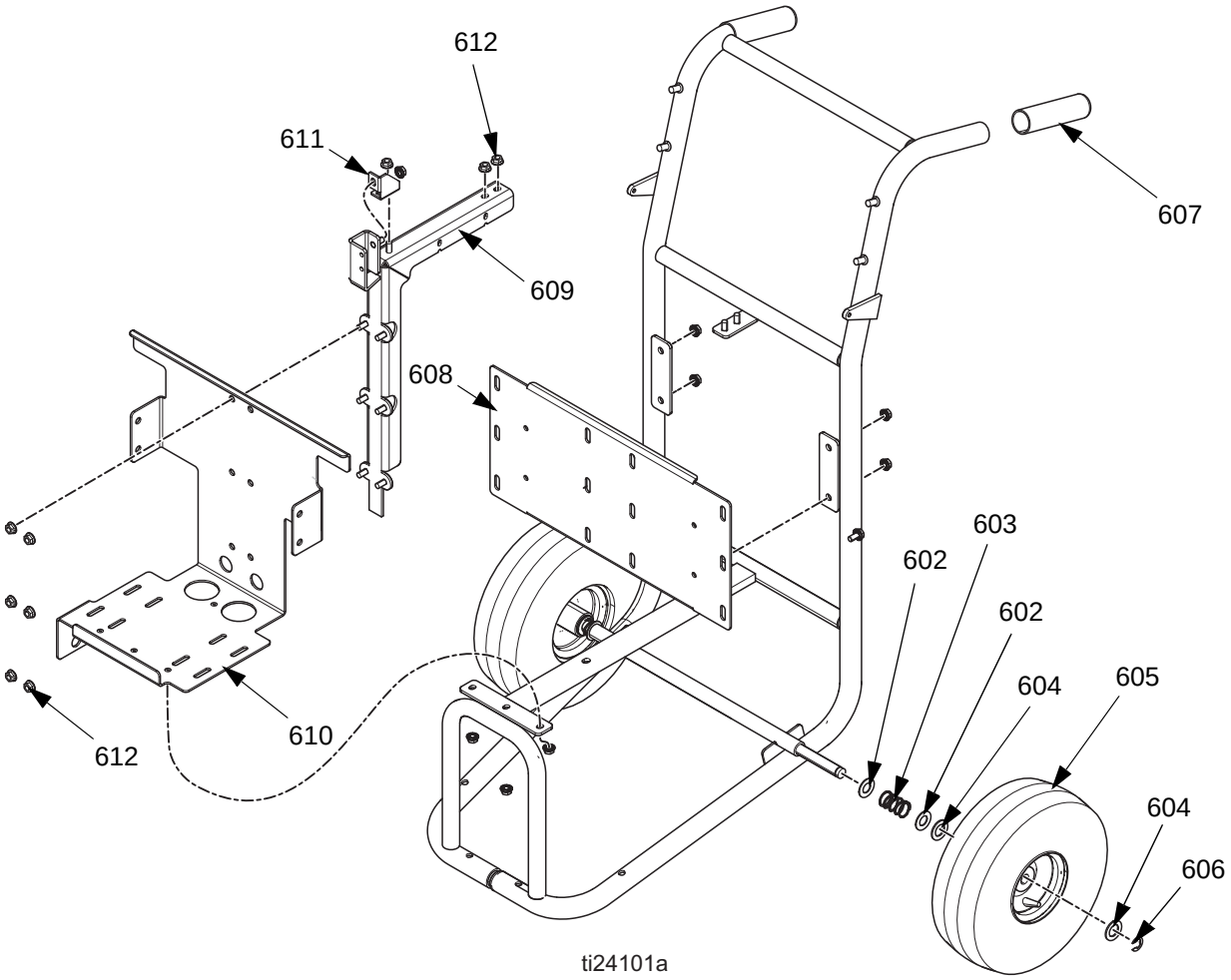

Ref.	Part	Description	Qty
602	154636	WASHER, flat	4
603	116411	SPRING	2
604	116477	WASHER, flat; nylon	4
605	116478	WHEEL, pneumatic	2
606	101242	RING, retaining	2
607		GRIP, handle	2
608	24U760	BRACKET, tank mount	1
609	24U761	BRACKET, crossbar	1
610	24U762	BRACKET, motor mount	1
611	24T150	GUSSET	1
612	110996	NUT, hex, flange head	18

Suggested Spare Replacement Parts

Keep the following spare parts on hand to reduce downtime.

All Units

Part	Description
24K984	DRYER, desiccant
15F895	O-RING, lid, tank
24K983	SWITCH, motor or heater power, with circuit breaker
113641	GAUGE, pressure, fluid; sst
101078	Y-STRAINER; includes 180199 element
180199	ELEMENT, Y-strainer, 20 mesh
15D909	ELEMENT, air filter, 5 micron; polypropylene
239914	VALVE, recirc/spray; includes seat and gasket
24L002	POTENTIOMETER, control knob
24G886	BOARD, control; 120 V units only
24G887	BOARD, control; 240 V units only
24K999	TRANSDUCER, pressure
24L006	PUMP, displacement; fits either side
287718	INLET KIT, tank to pump
249855	REPAIR KIT, displacement pump; includes seals, balls, bearings, intake valve seat)

Heated Units Only

Part	Description
24K981	DISPLAY, temperature, with sensor
24K980	FUSE, heater over-temperature
24K978	THERMOSTAT, heater
24K989	HEATER ELEMENT; 120 V units only
24K990	HEATER ELEMENT; 240 V units only

Accessories

Part	Description
249815	GUN, Fusion MP with 4-hose manifold
255325	GUN, MD2 Cold Spray
24P765	KIT, Joint Fill Extension

Dimensions

All Models

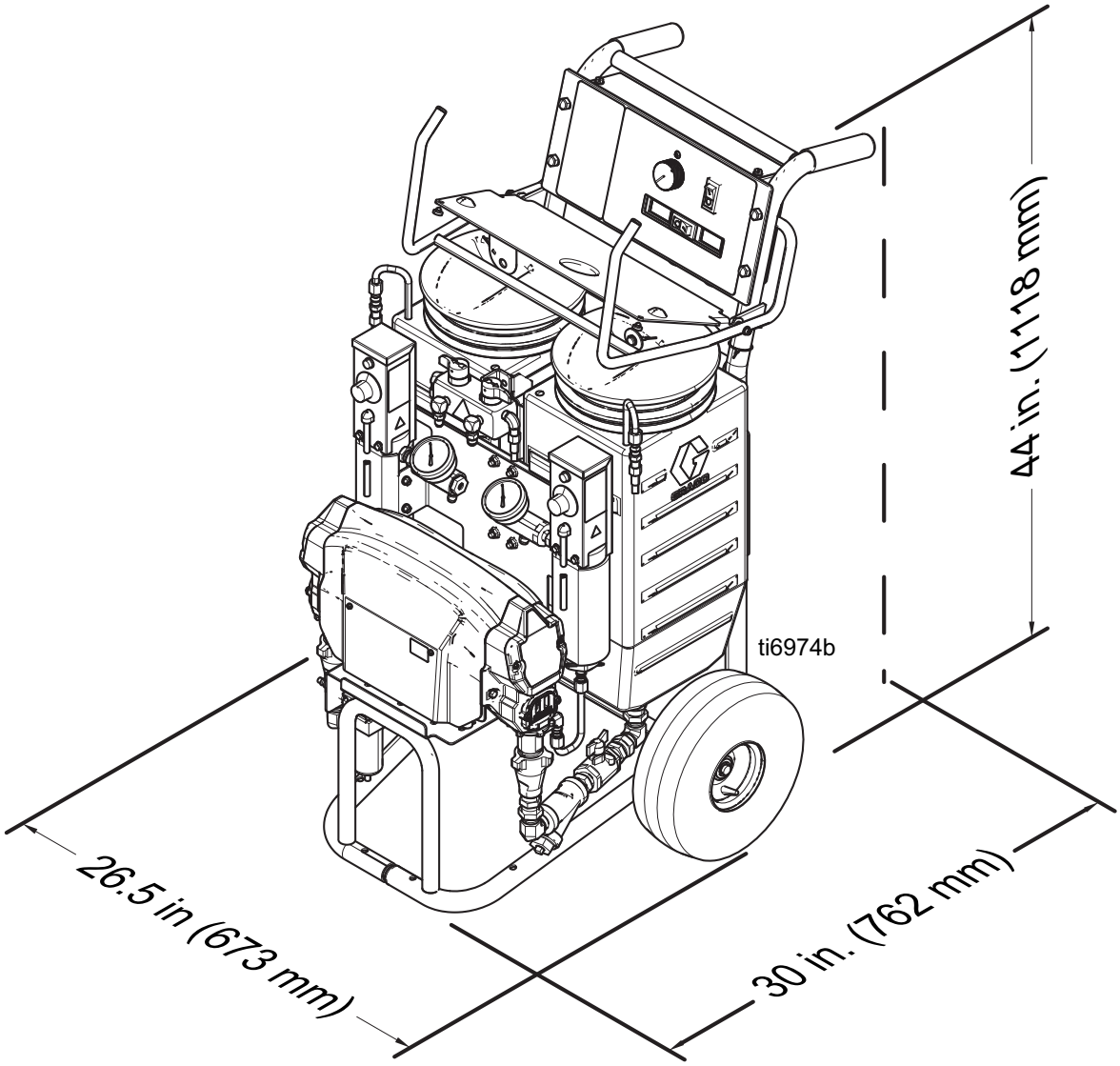

Technical Data

Maximum fluid working pressure	2000 psi (14 MPa, 140 bar)
Electrical requirements	*Model AP9570, CS9570:* 120 Vac, 1 phase, 50/60 Hz, 3500 W; requires two separate, dedicated 15 A circuits *Model AP9571, CS9571:* 240 Vac, 1 phase, 50/60 Hz, 3800 W; requires two separate, dedicated 10 A circuits *Model AP9572, CS9572:* 240 Vac, 1 phase, 50/60 Hz, 3800 W; requires a single dedicated 16 A circuit *Model 249806, 24R984:* 120 Vac, 1 phase, 50/60 Hz, 1800 W; requires a single dedicated 15 A circuit *Model 249808, 24R985:* 240 Vac, 1 phase, 50/60 Hz, 1800 W; requires a single dedicated 8 A circuit
Generator Size (for Reactor E-10 only)	*Heated:* 5000 W minimum *Nonheated:* 2500 W minimum
Maximum Fluid Temperature	160°F (71°C)
Maximum Ambient Temperature	110°F (43°C)
Maximum Output	12 lb/min (5.4 kg/min) at 340 cycles/min
Output per Cycle (A and B)	.00352 gal. (.0133 liter)
Overpressure Relief	Recirc/Spray valves automatically relieve excessive fluid pressure back to supply tanks
Heater Power	*120V models:* 850 W each; 1700 W total *240V models:* 1000 W each; 2000 W total
Sound Pressure	78.7 dB(A) in fast circulation mode 84.5 dB(A) at 2000 psi (14 MPa, 140 bar), 0.72 gpm (2.7 lpm)
Sound Power, per ISO 9614-2	88.6 dB(A) in fast circulation mode 94.4 dB(A) at 2000 psi (14 MPa, 140 bar), 0.72 gpm (2.7 lpm)

Tank Capacity*	7 gal. (26.5 liters) each (nominal)
Fluid Outlets	*Component A (ISO):* -5 JIC male *Component B (RES):* -6 JIC male
Fluid Circulation Returns	*Component A (ISO):* -5 JIC male *Component B (RES):* -6 JIC male
Air Inlet	1/4 in. quick-disconnect industrial type pin fitting
Air Outlet	1/4 npsm (m)
Gun Compressed Air Requirements	Fusion Gun (purge air and operating air): 4 scfm (0.112 m^3/min) MD2 Gun with disposable mixer kit: 14 scfm (0.392 m^3/min), with air spray valve fully open MD2 Gun with joint fill kit: 2 scfm (.056 m^3/min)
Hose Markings	*A Side:* Red *B Side:* Blue
Weight (empty)	approximately 160 lb (72 kg), depending on model
Wetted Parts	Aluminum, stainless steel, carbon steel, brass, carbide, chrome, chemically resistant o-rings, PTFE, ultra-high molecular weight poly-ethylene

All other brand names or marks are used for identification purposes and are trademarks of their respective owners.

** Not applicable on 25C350.*

Notes

Graco Standard Warranty

Graco warrants all equipment referenced in this document which is manufactured by Graco and bearing its name to be free from defects in material and workmanship on the date of sale to the original purchaser for use. With the exception of any special, extended, or limited warranty published by Graco, Graco will, for a period of twelve months from the date of sale, repair or replace any part of the equipment determined by Graco to be defective. This warranty applies only when the equipment is installed, operated and maintained in accordance with Graco's written recommendations.

This warranty does not cover, and Graco shall not be liable for general wear and tear, or any malfunction, damage or wear caused by faulty installation, misapplication, abrasion, corrosion, inadequate or improper maintenance, negligence, accident, tampering, or substitution of non-Graco component parts. Nor shall Graco be liable for malfunction, damage or wear caused by the incompatibility of Graco equipment with structures, accessories, equipment or materials not supplied by Graco, or the improper design, manufacture, installation, operation or maintenance of structures, accessories, equipment or materials not supplied by Graco.

This warranty is conditioned upon the prepaid return of the equipment claimed to be defective to an authorized Graco distributor for verification of the claimed defect. If the claimed defect is verified, Graco will repair or replace free of charge any defective parts. The equipment will be returned to the original purchaser transportation prepaid. If inspection of the equipment does not disclose any defect in material or workmanship, repairs will be made at a reasonable charge, which charges may include the costs of parts, labor, and transportation.

THIS WARRANTY IS EXCLUSIVE, AND IS IN LIEU OF ANY OTHER WARRANTIES, EXPRESS OR IMPLIED, INCLUDING BUT NOT LIMITED TO WARRANTY OF MERCHANTABILITY OR WARRANTY OF FITNESS FOR A PARTICULAR PURPOSE.

Graco's sole obligation and buyer's sole remedy for any breach of warranty shall be as set forth above. The buyer agrees that no other remedy (including, but not limited to, incidental or consequential damages for lost profits, lost sales, injury to person or property, or any other incidental or consequential loss) shall be available. Any action for breach of warranty must be brought within two (2) years of the date of sale.

GRACO MAKES NO WARRANTY, AND DISCLAIMS ALL IMPLIED WARRANTIES OF MERCHANTABILITY AND FITNESS FOR A PARTICULAR PURPOSE, IN CONNECTION WITH ACCESSORIES, EQUIPMENT, MATERIALS OR COMPONENTS SOLD BUT NOT MANUFACTURED BY GRACO. These items sold, but not manufactured by Graco (such as electric motors, switches, hose, etc.), are subject to the warranty, if any, of their manufacturer. Graco will provide purchaser with reasonable assistance in making any claim for breach of these warranties.

In no event will Graco be liable for indirect, incidental, special or consequential damages resulting from Graco supplying equipment hereunder, or the furnishing, performance, or use of any products or other goods sold hereto, whether due to a breach of contract, breach of warranty, the negligence of Graco, or otherwise.

FOR GRACO CANADA CUSTOMERS
The Parties acknowledge that they have required that the present document, as well as all documents, notices and legal proceedings entered into, given or instituted pursuant hereto or relating directly or indirectly hereto, be drawn up in English. Les parties reconnaissent avoir convenu que la rédaction du présente document sera en Anglais, ainsi que tous documents, avis et procédures judiciaires exécutés, donnés ou intentés, à la suite de ou en rapport, directement ou indirectement, avec les procédures concernées.

Graco Information

For the latest information about Graco products, visit www.graco.com.

TO PLACE AN ORDER, contact your Graco distributor or call to identify the nearest distributor.
Phone: 612-623-6921 **or Toll Free:** 1-800-328-0211 **Fax:** 612-378-3505

All written and visual data contained in this document reflects the latest product information available at the time of publication. Graco reserves the right to make changes at any time without notice.

For patent information, see www.graco.com/patents.

Original instructions. This manual contains English. MM 311075

Graco Headquarters: Minneapolis
International Offices: Belgium, China, Japan, Korea

GRACO INC. AND SUBSIDIARIES • P.O. BOX 1441 • MINNEAPOLIS MN 55440-1441 • USA

Copyright 2005, Graco Inc. All Graco manufacturing locations are registered to ISO 9001.
www.graco.com
Revision W, August 2016